Message Implementation Guideline

VDA 4984 T2 - Global DELFOR

based on

DELFOR
Delivery schedule message

UN D.04A S4 - S3 Profile (Part 11)

Version:	VDA 3.0
Variant:	Brose 1.0
Issue date:	31/01/2024
Author:	Brose

Message structure 2
Branching diagram 4
Segments 12

Structure / Table of Contents

No	Tag	St	MaxOcc	Level	Content
1	**UNA**	R	1	0	Service string advice
2	**UNB**	M	1	0	Interchange header
3	**UNH**	M	1	0	Message header
4	**BGM**	M	1	0	Beginning of message
5	**DTM**	M	1	1	Document Issue Date
6	**DTM**	O	1	1	Type of instruction
7	**FTX**	O	5	1	Information Text
	SG2	R	1	1	Buyer / Customer
8	**NAD**	M	1	1	Buyer's Name and Address
	SG2	R	1	1	Seller / Supplier
9	**NAD**	M	1	1	Seller's Name and Address
	SG6	R	9999	1	Ship to level
10	**GEI**	M	1	1	Processing information
	SG7	R	1	2	Ship to
11	**NAD**	M	1	2	Ship to
12	**LOC**	R	1	3	Place of discharge
	SG12	R	9999	2	Scheduled Article Details
13	**LIN**	M	1	2	Article number assigned by the buyer.
14	**PIA**	O	1	3	Article number assigned by the seller
15	**IMD**	O	10	3	Item short description
16	**LOC**	O	1	3	Internal place of destination
17	**FTX**	O	5	3	General information text
	SG13	R	1	3	Order number
18	**RFF**	M	1	3	Order number
19	**DTM**	O	1	4	Referenced document's date
	SG13	O	1	3	Delivery instruction number new
20	**RFF**	M	1	3	Reference
21	**DTM**	C	1	4	Delivery instruction date
	SG13	O	1	3	Delivery instruction number old
22	**RFF**	M	1	3	Delivery instruction number old
23	**DTM**	C	1	4	Delivery instruction date
	SG14	O	1	3	Article related contact information
24	**CTA**	M	1	3	Contact information
25	**COM**	O	2	4	Communication contact
	SG16	O	1	3	Delivery balance
26	**QTY**	M	1	3	Delivery balance quantity
	SG16	O	1	3	Cumulative quantity received
27	**QTY**	M	1	3	Cumulative quantity received
28	**DTM**	O	1	4	Cumulative quantity date(s)
	SG16	O	1	3	Cumulative quantity ordered
29	**QTY**	M	1	3	Cumulative quantity ordered
30	**DTM**	O	1	4	Cumulative quantity date for Gross demand
	SG16	O	3	3	Most recent arrival(s) of goods

No = Consecutive segment number, MaxOcc = Maximum occurrence of the segment/group
St = Status, EDIFACT: M=Mandatory, C=Conditional
User specific: R=Required, O=Optional, D=Dependent, A=Advised, N=Not used

Structure / Table of Contents

No	Tag	St	MaxOcc	Level	Content
31	**QTY**	M	1	3	Received quantity
	SG17	O	1	4	Last received delivery note number
32	**RFF**	M	1	4	Last received delivery note number
33	**DTM**	O	1	5	Delivery note date
	SG18	O	999	3	Sofortbedard
34	**SCC**	M	1	3	Scheduling conditions
	SG19	R	999	4	Urgent delivery quantity
35	**QTY**	M	1	4	Quantity
36	**DTM**	R	1	5	Scheduled date(s)
	SG18	R	999	3	To be shipped
37	**SCC**	M	1	3	Scheduling conditions
	SG19	R	999	4	Scheduled quantity
38	**QTY**	M	1	4	Quantity
39	**DTM**	R	1	5	Scheduled date(s)
40	**DTM**	D	1	5	Scheduled date(s)
41	**DTM**	D	1	5	Scheduled date(s)
	SG18	O	999	3	Authorization / Commitment
42	**SCC**	M	1	3	Scheduling conditions
	SG19	O	999	4	Date(s) and quantities
43	**QTY**	M	1	4	Quantity
44	**DTM**	O	1	5	Authorisation period
	SG18	O	999	3	Authorization / Commitment
45	**SCC**	M	1	3	Scheduling conditions
	SG19	O	999	4	Date(s) and quantities
46	**QTY**	M	1	4	Quantity
47	**DTM**	O	1	5	Authorisation period
48	**UNT**	M	1	0	Message trailer
49	**UNZ**	M	1	0	Interchange trailer

No = Consecutive segment number, MaxOcc = Maximum occurrence of the segment/group
St = Status, EDIFACT: M=Mandatory, C=Conditional
User specific: R=Required, O=Optional, D=Dependent, A=Advised, N=Not used

Branching Diagram of Used Segments/Groups

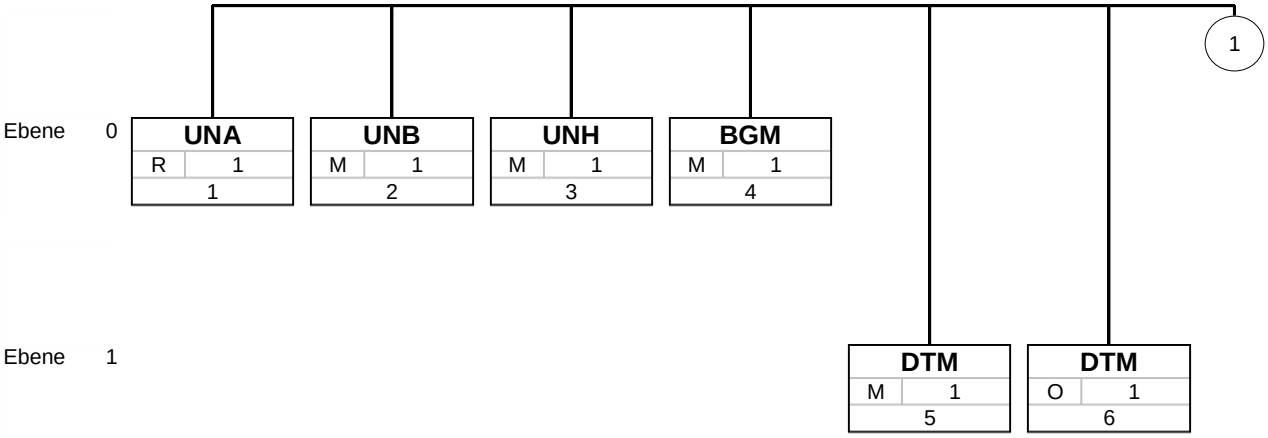

Tag	
St	MaxWdh
No	

Tag = Segment/Group Tag
St = Status (M=Mandatory, C=Conditional, R=Required, O=Optional, A=Advised, D=Dependent)
MaxOcc = Maximum occurrence of the segment/group
No = Consecutive segment number

Branching Diagram of Used Segments/Groups

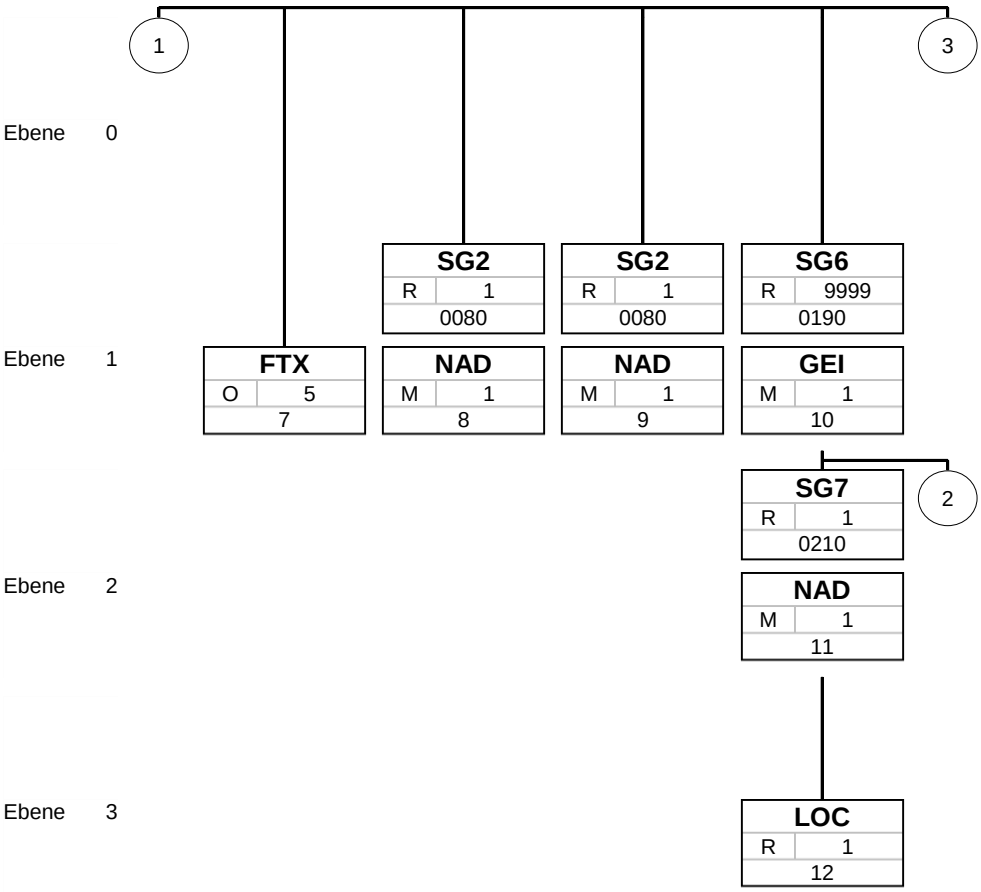

Tag	
St	MaxWdh
No	

Tag = Segment/Group Tag
St = Status (M=Mandatory, C=Conditional, R=Required, O=Optional, A=Advised, D=Dependent)
MaxOcc = Maximum occurrence of the segment/group
No = Consecutive segment number

Branching Diagram of Used Segments/Groups

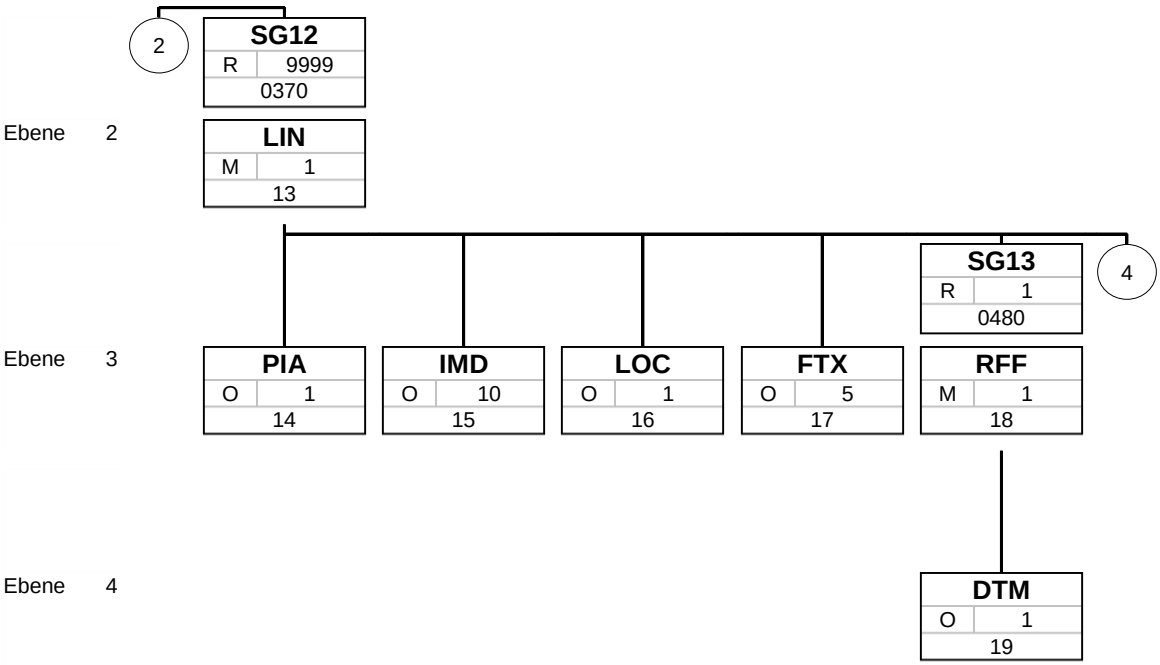

Tag	
St	MaxWdh
No	

Tag = Segment/Group Tag
St = Status (M=Mandatory, C=Conditional, R=Required, O=Optional, A=Advised, D=Dependent)
MaxOcc = Maximum occurrence of the segment/group
No = Consecutive segment number

Branching Diagram of Used Segments/Groups

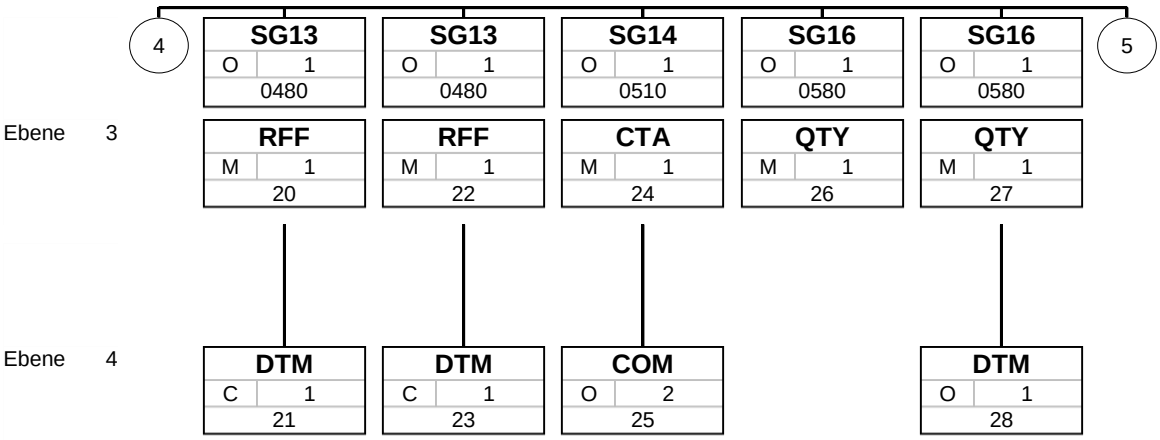

Tag	
St	MaxWdh
No	

Tag = Segment/Group Tag
St = Status (M=Mandatory, C=Conditional, R=Required, O=Optional, A=Advised, D=Dependent)
MaxOcc = Maximum occurrence of the segment/group
No = Consecutive segment number

Branching Diagram of Used Segments/Groups

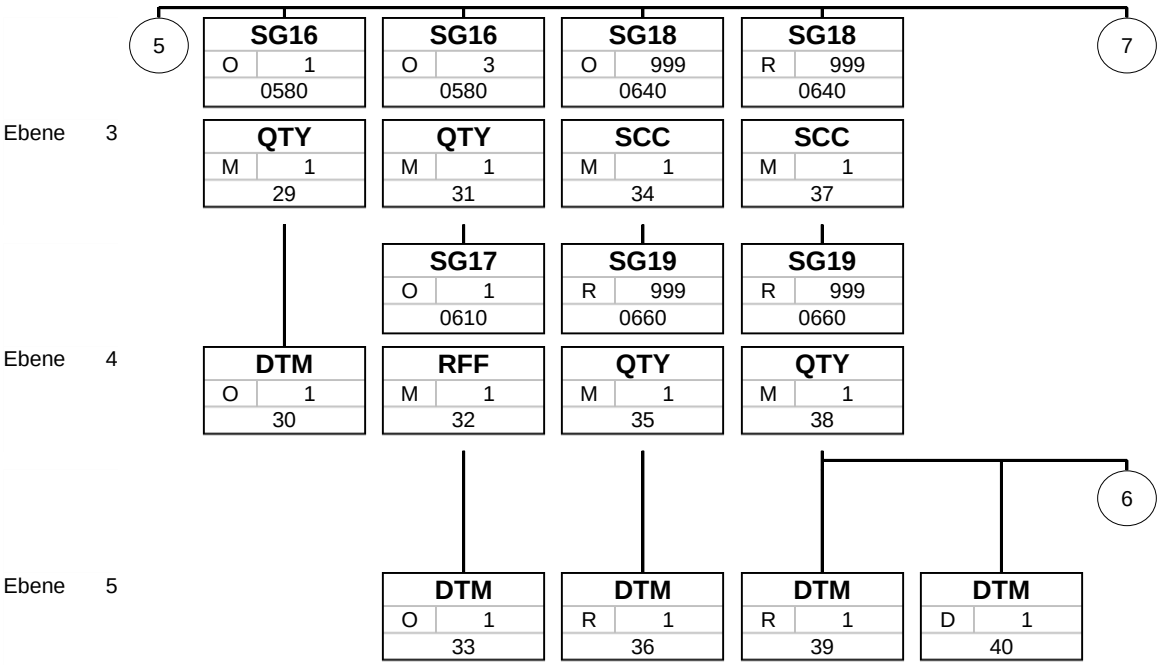

Tag	
St	MaxWdh
No	

Tag = Segment/Group Tag
St = Status (M=Mandatory, C=Conditional, R=Required, O=Optional, A=Advised, D=Dependent)
MaxOcc = Maximum occurrence of the segment/group
No = Consecutive segment number

Branching Diagram of Used Segments/Groups

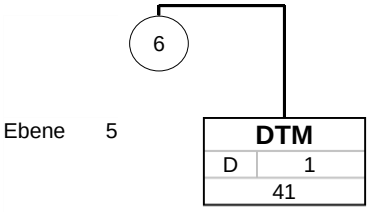

Tag	
St	MaxWdh
No	

Tag = Segment/Group Tag
St = Status (M=Mandatory, C=Conditional, R=Required, O=Optional, A=Advised, D=Dependent)
MaxOcc = Maximum occurrence of the segment/group
No = Consecutive segment number

Branching Diagram of Used Segments/Groups

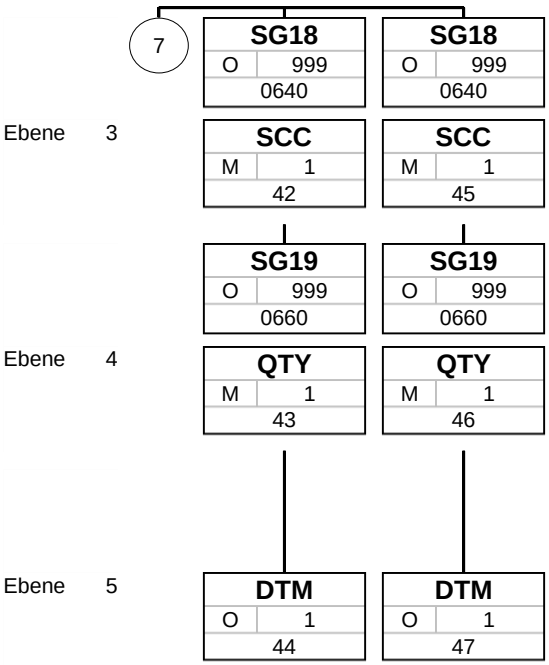

Tag	
St	MaxWdh
No	

Tag = Segment/Group Tag
St = Status (M=Mandatory, C=Conditional, R=Required, O=Optional, A=Advised, D=Dependent)
MaxOcc = Maximum occurrence of the segment/group
No = Consecutive segment number

Branching Diagram of Used Segments/Groups

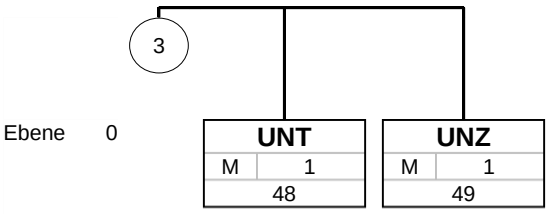

Tag	
St	MaxWdh
No	

Tag = Segment/Group Tag
St = Status (M=Mandatory, C=Conditional, R=Required, O=Optional, A=Advised, D=Dependent)
MaxOcc = Maximum occurrence of the segment/group
No = Consecutive segment number

Segments

No	Tag	St	MaxOcc	Level	Name
1	**UNA**	R	1	0	**Service string advice**

		Standard		Implementation		
Tag	Name	St	Format	St	Format	Usage / Remark
UNA						
UNA1	Component data element separator	M	an1	M	an1	Colon
UNA2	Data element separator	M	an1	M	an1	Plus sign
UNA3	Decimal notation	M	an1	M	an1	Full stop
UNA4	Release indicator	M	an1	M	an1	Question mark
UNA5	Reserved for future use	M	an1	M	an1	Blank
UNA6	Segment terminator	M	an1	M	an1	Apostrophe

Remark:

Example:

```
UNA:+.? '
```

No = Consecutive segment number
MaxOcc = Maximum occurrence of the segment/group
St = Status, EDIFACT: M=Mandatory, C=Conditional
User specific: R=Required, O=Optional, D=Dependent, A=Advised, N=Not used

Segments

No	Tag	St	MaxOcc	Level	Name
2	**UNB**	M	1	0	**Interchange header**

		Standard		Implementation		
Tag	Name	St	Format	St	Format	Usage / Remark
UNB						
S001	Syntax identifier	M		M		
0001	Syntax identifier	M	a4	M	a4	**UNOC UN/ECE level C**
0002	Syntax version number	M	an1	M	an1	**X Syntax version 4 ISO 9735-11 profile.** To use syntax version 4 according to the ISO 9735-11 profile, code "X" must be used here.
0080	Service code list directory version number	C	an..6	N		Not used
0133	Character encoding, coded	C	an..3	N		Not used
0076	Syntax release number	C	an2	N		Not used
S002	Interchange sender	M		M		
0004	Sender identification	M	an..35	M	an..35	Unique ID of the sender in the data transmission network or system used.
0007	Partner identification code qualifier	C	an..4	N		Not used
0008	Address for reverse routing	C	an..14	N		Not used
0042	Interchange sender internal sub-identification	C	an..35	N		Not used
S003	Interchange recipient	M		M		
0010	Recipient identification	M	an..35	M	an..35	Unique ID of the recipient in the data transmission network or system used.
0007	Partner identification code qualifier	C	an..4	N		Not used
0014	Routing address	C	an..14	N		Not used
0046	Interchange recipient internal sub-identification	C	an..35	N		Not used
S004	Date/time of preparation	M		M		
0017	Date of preparation	M	n8	M	n8	Attention: Difference to S3, 8 digits (including century)! Format CCYYMMDD
0019	Time of preparation	M	n4	M	n4	
0020	Interchange control reference	M	an..14	M	an..14	Address of an application or internal system at recipient's site.
S005	Recipient's reference, password	C		N		
0022	Recipient's reference/password	M	an..14	M	an..14	
0025	Recipient's reference/password qualifier	C	an2	N		Not used
0026	Application reference	C	an..14	N		Not used
0029	Processing priority code	C	a1	N		Not used
0031	Acknowledgement request	C	n1	N		Not used
0032	Communications agreement ID	C	an..35	N		Not used
0035	Test indicator	C	n1	O	n1	Only used if the data exchange is for test purposes. This data element is not transmitted for valid transmissions. **1 Interchange is a test**

Remark:

Example:

```
UNB+UNOC:X+O0013000428BROSE+012345678+20230414:1455+305384++++++1'
```

No = Consecutive segment number
MaxOcc = Maximum occurrence of the segment/group
St = Status, EDIFACT: M=Mandatory, C=Conditional
User specific: R=Required, O=Optional, D=Dependent, A=Advised, N=Not used

Segments

No	Tag	St	MaxOcc	Level	Name
3	**UNH**	M	1	0	**Message header**

		Standard		Implementation		
Tag	Name	St	Format	St	Format	Usage / Remark
UNH						
0062	Message reference number	M	an..14	M	an..14	
S009	Message identifier	M		M		
0065	Message type	M	an..6	M	an..6	**DELFOR Delivery schedule message**
0052	Message version number	M	an..3	M	an..3	**D Draft version/UN/EDIFACT Directory**
0054	Message release number	M	an..3	M	an..3	**04A Release 2004 - A**
0051	Controlling agency	M	an..2	M	an..2	**UN UN/CEFACT**
0057	Association assigned code	C	an..6	R	an..6	Identification of the subset release, assigned by the responsible organisation **GAVB30 VDA DELFOR Version 3.0**
0110	Code list directory version number	C	an..6	N		Not used
0113	Message type sub-function identification	C	an..6	N		Not used
0068	Common access reference	C	an..35	N		Not used
S010	Status of the transfer	C		N		
0070	Sequence of transfers	M	n..2	N		Not used
0073	First and last transfer	C	a1	N		Not used
S016	Message subset identification	C		N		
0115	Message subset identification	M	an..14	N		Not used
0116	Message subset version number	C	an..3	N		Not used
0118	Message subset release number	C	an..3	N		Not used
0051	Controlling agency	C	an..2	N		Not used
S017	Message implementation guideline identification	C		N		
0121	Message implementation guideline identification	M	an..14	N		Not used
0122	Message implementation guideline version number	C	an..3	N		Not used
0124	Message implementation guideline release number	C	an..3	N		Not used
0051	Controlling agency	C	an..2	N		Not used
S018	Scenario identification	C		N		
0127	Scenario identification	M	an..14	N		Not used
0128	Scenario version number	C	an..3	N		Not used
0130	Scenario release number	C	an..3	N		Not used
0051	Controlling agency	C	an..2	N		Not used

Remark:

Example:

```
UNH+1+DELFOR:D:04A:UN:GAVB30'
```

No = Consecutive segment number
MaxOcc = Maximum occurrence of the segment/group
St = Status, EDIFACT: M=Mandatory, C=Conditional
User specific: R=Required, O=Optional, D=Dependent, A=Advised, N=Not used

Segments

No	Tag	St	MaxOcc	Level	Name
4	**BGM**	M	1	0	**Beginning of message**

		Standard		Implementation		
Tag	Name	St	Format	St	Format	Usage / Remark
BGM						
C002	Document/message name	C		R		
1001	Document name code	C	an..3	R	an..3	**241 Delivery schedule** Code 241 - message contains forecasting and firm figures (combination of firm instructions and forecasting figures).
1131	Code list identification code	C	an..17	N		Not used
3055	Code list responsible agency code	C	an..3	O	an..3	**6 UN/ECE (United Nations - Economic Commission for Europe)** Code specifying the agency responsible for a code list.
1000	Document name	C	an..35	N		Not used
C106	Document/message identification	C		R		
1004	Document identifier	C	an..35	R	an..35	Unique identifier of a document. Synonym: document number.
1056	Version identifier	C	an..9	N		Not used
1060	Revision identifier	C	an..6	N		Not used
1225	Message function code	C	an..3	O	an..3	**9 Original** Code indicating the function of the document.
4343	Response type code	C	an..3	N		Not used

Remark:

Example:

```
BGM+241::6+20+9'
```

No = Consecutive segment number
MaxOcc = Maximum occurrence of the segment/group
St = Status, EDIFACT: M=Mandatory, C=Conditional
User specific: R=Required, O=Optional, D=Dependent, A=Advised, N=Not used

Segments

No	Tag	St	MaxOcc	Level	Name
5	**DTM**	M	1	1	**Document Issue Date**

		Standard		Implementation		
Tag	Name	St	Format	St	Format	Usage / Remark
DTM						
C507	Date/time/period	M		M		
2005	Date or time or period function code qualifier	M	an..3	M	an..3	**137 Document issue date time**
2380	Date or time or period text	C	an..35	R	an..35	Date on which a document or business signal was issued.
2379	Date or time or period format code	C	an..3	O	an..3	**102 CCYYMMDD** **203 CCYYMMDDHHMM**

Remark:

Example:

```
DTM+137:20230414:102'
```

No = Consecutive segment number
MaxOcc = Maximum occurrence of the segment/group
St = Status, EDIFACT: M=Mandatory, C=Conditional
User specific: R=Required, O=Optional, D=Dependent, A=Advised, N=Not used

Segments

No	Tag	St	MaxOcc	Level	Name
6	**DTM**	O	1	1	**Type of instruction**

		Standard		Implementation		
Tag	Name	St	Format	St	Format	Usage / Remark
DTM						
C507	Date/time/period	M		M		
2005	Date or time or period function code qualifier	M	an..3	M	an..3	**2 Delivery date/time, requested** Code 2 indicates that all dates in this delivery instruction are delivery dates (goods arriving at destination). Delivery date, requested at the unloading point defined by Brose. The subsequent DTM segments in the delivery schedules (SG-SCC/SG-DTM) must be qualified accordingly.
2380	Date or time or period text	C	an..35	N		Not used
2379	Date or time or period format code	C	an..3	N		Not used

Remark:

Example:

```
DTM+2'
```

No = Consecutive segment number
MaxOcc = Maximum occurrence of the segment/group
St = Status, EDIFACT: M=Mandatory, C=Conditional
User specific: R=Required, O=Optional, D=Dependent, A=Advised, N=Not used

Segments

No	Tag	St	MaxOcc	Level	Name
7	**FTX**	O	5	1	**Information Text**

		Standard		Implementation		
Tag	Name	St	Format	St	Format	Usage / Remark
FTX						
4451	Text subject code qualifier	M	an..3	M	an..3	**AAI General information**
4453	Free text function code	C	an..3	N		Not used
C107	Text reference	C		N		
4441	Free text description code	M	an..17	N		Not used
1131	Code list identification code	C	an..17	N		Not used
3055	Code list responsible agency code	C	an..3	N		Not used
C108	Text literal	C		R		
4440	Free text	M	an..512	M	an..256	A line of plain, non-structured text information.
4440	Free text	C	an..512	O	an..256	see 4440#1
4440	Free text	C	an..512	O	an..256	see 4440#1
4440	Free text	C	an..512	O	an..256	see 4440#1
4440	Free text	C	an..512	O	an..256	see 4440#1
3453	Language name code	C	an..3	O	an..3	Code specifying the language name. Use ISO 639-1988.
4447	Free text format code	C	an..3	N		Not used

Remark:
General information text

Example:
```
FTX+AAI+++Text 1:Text 2:Text 3:Text 4:Text 5+DE'
```

No = Consecutive segment number
MaxOcc = Maximum occurrence of the segment/group
St = Status, EDIFACT: M=Mandatory, C=Conditional
User specific: R=Required, O=Optional, D=Dependent, A=Advised, N=Not used

Segments

No	Tag	St	MaxOcc	Level	Name
	SG2	R	1	1	**Buyer / Customer**
8	**NAD**	M	1	1	**Buyer's Name and Address**

		Standard		Implementation		
Tag	Name	St	Format	St	Format	Usage / Remark
NAD						
3035	Party function code qualifier	M	an..3	M	an..3	**BY Buyer**
C082	Party identification details	C		R		
3039	Party identifier	M	an..35	M	an..35	Unique identification of a party by an ID - customer number or plant code
1131	Code list identification code	C	an..17	N		Not used
3055	Code list responsible agency code	C	an..3	R	an..3	Code specifying the agency responsible for a code list. **91 Assigned by seller or seller's agent** **92 Assigned by buyer or buyer's agent**
C058	Name and address	C		N		
3124	Name and address description	M	an..35	N		Not used
3124	Name and address description	C	an..35	N		Not used
3124	Name and address description	C	an..35	N		Not used
3124	Name and address description	C	an..35	N		Not used
3124	Name and address description	C	an..35	N		Not used
C080	Party name	C		R		
3036	Party name	M	an..35	M	an..35	Single text line for specification of a name
3036	Party name	C	an..35	O	an..35	see 3036#1
3036	Party name	C	an..35	N		Not used
3036	Party name	C	an..35	N		Not used
3036	Party name	C	an..35	N		Not used
3045	Party name format code	C	an..3	N		Not used
C059	Street	C		O		
3042	Street and number or post office box identifier	M	an..35	M	an..35	The name that identifies the location of a house or building: usually within a street as part of an address.
3042	Street and number or post office box identifier	C	an..35	O	an..35	see 3042#1
3042	Street and number or post office box identifier	C	an..35	N		Not used
3042	Street and number or post office box identifier	C	an..35	N		Not used
3164	City name	C	an..35	O	an..35	The name of the city, town, or village of this address.
C819	Country sub-entity details	C		O		
3229	Country sub-entity name code	C	an..9	R	an..9	State or region within a country. The use of UN LoCodes is recommended.
1131	Code list identification code	C	an..17	N		Not used
3055	Code list responsible agency code	C	an..3	N		Not used
3228	Country sub-entity name	C	an..70	N		Not used
3251	Postal identification code	C	an..17	O	an..17	The identifier for one or more properties according to the postal service of that country.
3207	Country name code	C	an..3	O	an..3	Provides the country part of an address using a code. Use ISO3166 two alpha code.

Remark:
Party to whom merchandise and/or service is sold.

Example:
```
NAD+BY+04547::91++Brose México, S.A. de C.V.:Co+Calle 2 No. 7, Fracc. Ind. Benito J:1+Querétaro, M
éxico++76120+MX'
```

No = Consecutive segment number
MaxOcc = Maximum occurrence of the segment/group
St = Status, EDIFACT: M=Mandatory, C=Conditional
User specific: R=Required, O=Optional, D=Dependent, A=Advised, N=Not used

Segments

No	Tag	St	MaxOcc	Level	Name
	SG2	R	1	1	**Seller / Supplier**
9	**NAD**	M	1	1	**Seller's Name and Address**

		Standard		Implementation		
Tag	Name	St	Format	St	Format	Usage / Remark
NAD						
3035	Party function code qualifier	M	an..3	M	an..3	**SE Seller**
C082	Party identification details	C		R		
3039	Party identifier	M	an..35	M	an..35	Unique identification of a party by an ID - Supplier number
1131	Code list identification code	C	an..17	N		Not used
3055	Code list responsible agency code	C	an..3	R	an..3	Code specifying the agency responsible for a code list. **92 Assigned by buyer or buyer's agent**
C058	Name and address	C		N		
3124	Name and address description	M	an..35	N		Not used
3124	Name and address description	C	an..35	N		Not used
3124	Name and address description	C	an..35	N		Not used
3124	Name and address description	C	an..35	N		Not used
3124	Name and address description	C	an..35	N		Not used
C080	Party name	C		O		
3036	Party name	M	an..35	M	an..35	Single text line for specification of a name
3036	Party name	C	an..35	O	an..35	see 3036#1
3036	Party name	C	an..35	N		Not used
3036	Party name	C	an..35	N		Not used
3036	Party name	C	an..35	N		Not used
3045	Party name format code	C	an..3	N		Not used
C059	Street	C		O		
3042	Street and number or post office box identifier	M	an..35	M	an..35	The name that identifies the location of a house or building: usually within a street as part of an address.
3042	Street and number or post office box identifier	C	an..35	O	an..35	see 3042#1
3042	Street and number or post office box identifier	C	an..35	N		Not used
3042	Street and number or post office box identifier	C	an..35	N		Not used
3164	City name	C	an..35	O	an..35	The name of the city, town, or village of this address.
C819	Country sub-entity details	C		O		
3229	Country sub-entity name code	C	an..9	R	an..9	State or region within a country. The use of UN LoCodes is recommended.
1131	Code list identification code	C	an..17	N		Not used
3055	Code list responsible agency code	C	an..3	N		Not used
3228	Country sub-entity name	C	an..70	N		Not used
3251	Postal identification code	C	an..17	O	an..17	The identifier for one or more properties according to the postal service of that country; a group of letters and/or numbers added to the postal address to assist in the sorting of mail.
3207	Country name code	C	an..3	O	an..3	Provides the country part of an address using a code. Use ISO3166 two alpha code.

Remark:
Seller: The party who has liability to fulfill the contract.

Example:
```
NAD+SE+0000001234::92++Lieferant Muster:CO.KG+Musterstr. 20-30:Straße2+Musterstadt++51399+DE'
```

No = Consecutive segment number
MaxOcc = Maximum occurrence of the segment/group
St = Status, EDIFACT: M=Mandatory, C=Conditional
User specific: R=Required, O=Optional, D=Dependent, A=Advised, N=Not used

Segments

No	Tag	St	MaxOcc	Level	Name
	SG6	R	9999	1	**Ship to level**
10	**GEI**	M	1	1	**Processing information**

		Standard		Implementation		
Tag	Name	St	Format	St	Format	Usage / Remark
GEI						
9649	Processing information code qualifier	M	an..3	M	an..3	**3 Scheduling type information**
C012	Processing indicator	C		R		
7365	Processing indicator description code	C	an..3	R	an..3	**37 Complete information** 37=The delivery instruction data replace all previously sent information completely (applicable for forecast and delivery instruction process - LAB)
1131	Code list identification code	C	an..17	N		Not used
3055	Code list responsible agency code	C	an..3	N		Not used
7364	Processing indicator description	C	an..35	N		Not used
7187	Process type description code	C	an..17	N		Not used

Remark:
This level gives the delivery instruction details (schedule dates, scheduled quantities etc.) for one individual ship-to party e.g. a plant in a delivery instruction or forecast.
This specification is based on the following principles from VDA recommendation:
1. A new delivery instruction (DE 1001 in BGM contains code 236, 240 or 241) replaces all data of the previous delivery instruction.
2. A call-off delivery instruction (DE 1001 in BGM contains code 242) replaces the data for the effective period (effective from .. effective to date), all other data of the delivery instruction remain valid.
3. A separate deliver instruction has to be generated as soon the following parameter changes:
a) the ship to party
b) the place of discharge
c) the order number (frame contract)
d) the article/part number
e) the model year, if applicable.

Consequently according to this logic a new SG with the trigger segment GEI must be generated as soon as the ship to or place of discharge (always transmitted at ship to level in SG-GEI/SG-NAD changes. If one of the other parameters changes, a new SG with the trigger segment LIN is sufficient.
GIS segment is replaced with GEI in D.02B.

Example:
```
GEI+3+37'
```

No = Consecutive segment number
MaxOcc = Maximum occurrence of the segment/group
St = Status, EDIFACT: M=Mandatory, C=Conditional
User specific: R=Required, O=Optional, D=Dependent, A=Advised, N=Not used

Segments

No	Tag	St	MaxOcc	Level	Name
	SG6	R	9999	1	**Ship to level**
	SG7	R	1	2	**Ship to**
11	**NAD**	M	1	2	**Ship to**

		Standard		Implementation		
Tag	Name	St	Format	St	Format	Usage / Remark
NAD						
3035	Party function code qualifier	M	an..3	M	an..3	**ST Ship to**
C082	Party identification details	C		R		
3039	Party identifier	M	an..35	M	an..35	Plant code
1131	Code list identification code	C	an..17	N		Not used
3055	Code list responsible agency code	C	an..3	R	an..3	**92 Assigned by buyer or buyer's agent** Code specifying the agency responsible for a code list.
C058	Name and address	C		N		
3124	Name and address description	M	an..35	N		Not used
3124	Name and address description	C	an..35	N		Not used
3124	Name and address description	C	an..35	N		Not used
3124	Name and address description	C	an..35	N		Not used
3124	Name and address description	C	an..35	N		Not used
C080	Party name	C		O		
3036	Party name	M	an..35	M	an..35	Single text line for specification of a name
3036	Party name	C	an..35	O	an..35	see 3036#1
3036	Party name	C	an..35	O	an..35	see 3036#1
3036	Party name	C	an..35	N		Not used
3036	Party name	C	an..35	N		Not used
3045	Party name format code	C	an..3	N		Not used
C059	Street	C		O		
3042	Street and number or post office box identifier	M	an..35	M	an..35	The name that identifies the location of a house or building: usually within a street as part of an address.
3042	Street and number or post office box identifier	C	an..35	O	an..35	see 3042#1
3042	Street and number or post office box identifier	C	an..35	N		Not used
3042	Street and number or post office box identifier	C	an..35	N		Not used
3164	City name	C	an..35	O	an..35	The name of the city, town, or village of this address.
C819	Country sub-entity details	C		O		
3229	Country sub-entity name code	C	an..9	R	an..9	State or region within a country. The use of UN LoCodes is recommended.
1131	Code list identification code	C	an..17	N		Not used
3055	Code list responsible agency code	C	an..3	N		Not used
3228	Country sub-entity name	C	an..70	N		Not used
3251	Postal identification code	C	an..17	O	an..17	The identifier for one or more properties according to the postal service of that country.
3207	Country name code	C	an..3	O	an..3	Provides the country part of an address using a code. Use ISO3166 two alpha code.

Remark:
The party to which goods are to be shipped (consigned).

Example:
```
NAD+ST+1025::92++Rauh Spedition & Logistik GmbH+Hans Rauh Straße 1+Großheirath++96269+DE'
```

No = Consecutive segment number
MaxOcc = Maximum occurrence of the segment/group
St = Status, EDIFACT: M=Mandatory, C=Conditional
User specific: R=Required, O=Optional, D=Dependent, A=Advised, N=Not used

Segments

No	Tag	St	MaxOcc	Level	Name
	SG6	R	9999	1	**Ship to level**
	SG7	R	1	2	**Ship to**
12	**LOC**	R	1	3	**Place of discharge**

		Standard		Implementation		
Tag	Name	St	Format	St	Format	Usage / Remark
LOC						
3227	Location function code qualifier	M	an..3	M	an..3	**11 Place of discharge**
C517	Location identification	C		R		
3225	Location name code	C	an..35	O	an..35	Identifier / code specifying the name of the place of discharge - unloading point.
1131	Code list identification code	C	an..17	N		Not used
3055	Code list responsible agency code	C	an..3	O	an..3	Code specifying the agency responsible for a code list. **92 Assigned by buyer or buyer's agent**
3224	Location name	C	an..256	N		Not used
C519	Related location one identification	C		N		
3223	First related location name code	C	an..25	N		Not used
1131	Code list identification code	C	an..17	N		Not used
3055	Code list responsible agency code	C	an..3	N		Not used
3222	First related location name	C	an..70	N		Not used
C553	Related location two identification	C		N		
3233	Second related location name code	C	an..25	N		Not used
1131	Code list identification code	C	an..17	N		Not used
3055	Code list responsible agency code	C	an..3	N		Not used
3232	Second related location name	C	an..70	N		Not used
5479	Relation code	C	an..3	N		Not used

Remark:
Place of discharge: consolidation center, service provider, receiving plant, seaport, airport, freight terminal, rail station or other place at which the goods (cargo) are unloaded from the means of transport having been used for their carriage.

Example:
```
LOC+11+RAUKC::92'
```

No = Consecutive segment number
MaxOcc = Maximum occurrence of the segment/group
St = Status, EDIFACT: M=Mandatory, C=Conditional
User specific: R=Required, O=Optional, D=Dependent, A=Advised, N=Not used

Segments

No	Tag	St	MaxOcc	Level	Name
	SG6	R	9999	1	**Ship to level**
	SG12	R	9999	2	**Scheduled Article Details**
13	**LIN**	M	1	2	**Article number assigned by the buyer.**

		Standard		Implementation		
Tag	Name	St	Format	St	Format	Usage / Remark
LIN						
1082	Line item identifier	C	an..6	N		Not used
1229	Action request/notification description code	C	an..3	N		Not used
C212	Item number identification	C		R		
7140	Item identifier	C	an..35	R	an10	10 digit part number, assigned by the buyer
7143	Item type identification code	C	an..3	R	an..3	**IN Buyer's item number**
1131	Code list identification code	C	an..17	N		Not used
3055	Code list responsible agency code	C	an..3	N		Not used
C829	Sub-line information	C		N		
5495	Sub-line indicator code	C	an..3	N		Not used
1082	Line item identifier	C	an..6	N		Not used
1222	Configuration level number	C	n..2	N		Not used
7083	Configuration operation code	C	an..3	N		Not used

Remark:
An article required by the buyer, which is scheduled to be delivered. All other segments in the detail section following the LIN segment refer to the line item.

Example:
```
LIN+++A62404-110:IN'
```

No = Consecutive segment number
MaxOcc = Maximum occurrence of the segment/group
St = Status, EDIFACT: M=Mandatory, C=Conditional
User specific: R=Required, O=Optional, D=Dependent, A=Advised, N=Not used

Segments

No	Tag	St	MaxOcc	Level	Name
	SG6	R	9999	1	**Ship to level**
	SG12	R	9999	2	**Scheduled Article Details**
14	**PIA**	O	1	3	**Article number assigned by the seller**

		Standard		Implementation		
Tag	Name	St	Format	St	Format	Usage / Remark
PIA						
4347	Product identifier code qualifier	M	an..3	M	an..3	**1 Additional identification**
C212	Item number identification	M		M		
7140	Item identifier	C	an..35	R	an..35	Article number assigned by the seller.
7143	Item type identification code	C	an..3	R	an..3	**SA Supplier's article number** The listed codes are applicable also to the DE 7143 in the following repetitions of CDE C212. At the request of the supplier the supplier's part number can be maintained in the Brose ERP-system through the responsible material-controller of the plant and can then be transmitted in the message.
1131	Code list identification code	C	an..17	N		Not used
3055	Code list responsible agency code	C	an..3	N		Not used
C212	Item number identification	C		N		
7140	Item identifier	C	an..35	N		Not used
7143	Item type identification code	C	an..3	N		Not used
1131	Code list identification code	C	an..17	N		Not used
3055	Code list responsible agency code	C	an..3	N		Not used
C212	Item number identification	C		N		
7140	Item identifier	C	an..35	N		Not used
7143	Item type identification code	C	an..3	N		Not used
1131	Code list identification code	C	an..17	N		Not used
3055	Code list responsible agency code	C	an..3	N		Not used
C212	Item number identification	C		N		
7140	Item identifier	C	an..35	N		Not used
7143	Item type identification code	C	an..3	N		Not used
1131	Code list identification code	C	an..17	N		Not used
3055	Code list responsible agency code	C	an..3	N		Not used
C212	Item number identification	C		N		
7140	Item identifier	C	an..35	N		Not used
7143	Item type identification code	C	an..3	N		Not used
1131	Code list identification code	C	an..17	N		Not used
3055	Code list responsible agency code	C	an..3	N		Not used

Remark:

Example:

```
PIA+1+123456:SA'
```

No = Consecutive segment number
MaxOcc = Maximum occurrence of the segment/group
St = Status, EDIFACT: M=Mandatory, C=Conditional
User specific: R=Required, O=Optional, D=Dependent, A=Advised, N=Not used

Segments

No	Tag	St	MaxOcc	Level	Name
	SG6	R	9999	1	**Ship to level**
	SG12	R	9999	2	**Scheduled Article Details**
15	**IMD**	O	10	3	**Item short description**

		Standard		Implementation		
Tag	Name	St	Format	St	Format	Usage / Remark
IMD						
7077	Description format code	C	an..3	O	an..3	**F Free-form** Code specifying the format of a description.
C272	Item characteristic	C		N		
7081	Item characteristic code	C	an..3	N		Not used
1131	Code list identification code	C	an..17	N		Not used
3055	Code list responsible agency code	C	an..3	N		Not used
C273	Item description	C		O		
7009	Item description code	C	an..17	N		Not used
1131	Code list identification code	C	an..17	N		Not used
3055	Code list responsible agency code	C	an..3	N		Not used
7008	Item description	C	an..256	O	an..256	The short name or description of an article plain text.
7008	Item description	C	an..256	O	an..256	The short name or description of an article in plain text.
3453	Language name code	C	an..3	O	an..3	
7383	Surface or layer code	C	an..3	N		Not used

Remark:

Example:

```
IMD+F++:::Entkopplungsring LA-BS-ELLIP-1_-CD4__-D::DE'
```

No = Consecutive segment number
MaxOcc = Maximum occurrence of the segment/group
St = Status, EDIFACT: M=Mandatory, C=Conditional
User specific: R=Required, O=Optional, D=Dependent, A=Advised, N=Not used

Segments

No	Tag	St	MaxOcc	Level	Name
	SG6	R	9999	1	**Ship to level**
	SG12	R	9999	2	**Scheduled Article Details**
16	**LOC**	O	1	3	**Internal place of destination**

		Standard		Implementation		
Tag	Name	St	Format	St	Format	Usage / Remark
LOC						
3227	Location function code qualifier	M	an..3	M	an..3	159 - Internal place of destination **159 Additional internal destination**
C517	Location identification	C		R		
3225	Location name code	C	an..35	O	an..35	Identifier / code specifying the name of a location.
1131	Code list identification code	C	an..17	N		Not used
3055	Code list responsible agency code	C	an..3	O	an..3	**92 Assigned by buyer or buyer's agent** Code specifying the agency responsible for a code list.
3224	Location name	C	an..256	N		Not used
C519	Related location one identification	C		N		
3223	First related location name code	C	an..25	N		Not used
1131	Code list identification code	C	an..17	N		Not used
3055	Code list responsible agency code	C	an..3	N		Not used
3222	First related location name	C	an..70	N		Not used
C553	Related location two identification	C		N		
3233	Second related location name code	C	an..25	N		Not used
1131	Code list identification code	C	an..17	N		Not used
3055	Code list responsible agency code	C	an..3	N		Not used
3232	Second related location name	C	an..70	N		Not used
5479	Relation code	C	an..3	N		Not used

Remark:
An internal location within the ship-to's premises, to which goods are moved after they have been unloaded, e.g. an assembly line, an internal warehouse, etc.

Example:
```
LOC+159+5620::92'
```

No = Consecutive segment number
MaxOcc = Maximum occurrence of the segment/group
St = Status, EDIFACT: M=Mandatory, C=Conditional
User specific: R=Required, O=Optional, D=Dependent, A=Advised, N=Not used

Segments

No	Tag	St	MaxOcc	Level	Name
	SG6	R	9999	1	**Ship to level**
	SG12	R	9999	2	**Scheduled Article Details**
17	**FTX**	O	5	3	**General information text**

		Standard		Implementation		
Tag	Name	St	Format	St	Format	Usage / Remark
FTX						
4451	Text subject code qualifier	M	an..3	M	an..3	**AAI General information**
4453	Free text function code	C	an..3	N		Not used
C107	Text reference	C		N		
4441	Free text description code	M	an..17	N		Not used
1131	Code list identification code	C	an..17	N		Not used
3055	Code list responsible agency code	C	an..3	N		Not used
C108	Text literal	C		R		
4440	Free text	M	an..512	M	an..256	A line of plain, non-structured text information.
4440	Free text	C	an..512	O	an..256	see 4440#1
4440	Free text	C	an..512	O	an..256	see 4440#1
4440	Free text	C	an..512	O	an..256	see 4440#1
4440	Free text	C	an..512	O	an..256	see 4440#1
3453	Language name code	C	an..3	O	an..3	Code specifying the language name. Use ISO 639-1988.
4447	Free text format code	C	an..3	N		Not used

Remark:
General information text

Example:
```
FTX+AAI+++Text1:Text2:Text3:Text4:Text5+DE'
```

No = Consecutive segment number
MaxOcc = Maximum occurrence of the segment/group
St = Status, EDIFACT: M=Mandatory, C=Conditional
User specific: R=Required, O=Optional, D=Dependent, A=Advised, N=Not used

Segments

No	Tag	St	MaxOcc	Level	Name
	SG6	R	9999	1	**Ship to level**
	SG12	R	9999	2	**Scheduled Article Details**
	SG13	R	1	3	**Order number**
18	**RFF**	M	1	3	**Order number**

		Standard		Implementation		
Tag	Name	St	Format	St	Format	Usage / Remark
RFF						
C506	Reference	M		M		
1153	Reference code qualifier	M	an..3	M	an..3	**ON Order document identifier, buyer assigned** Th order number / frame contract number is normally not the order number of the purchasing department! The order number is a key reference of the call-off. It is assigned by the ERP system.
1154	Reference identifier	C	an..70	R	an..17	Unique identifier of a document. Synonym: document number.
1156	Document line identifier	C	an..6	N		Not used
4000	Reference version identifier	C	an..35	N		Not used
1060	Revision identifier	C	an..6	N		Not used

Remark:

Example:

```
RFF+ON:5508856298'
```

No = Consecutive segment number
MaxOcc = Maximum occurrence of the segment/group
St = Status, EDIFACT: M=Mandatory, C=Conditional
User specific: R=Required, O=Optional, D=Dependent, A=Advised, N=Not used

Segments

No	Tag	St	MaxOcc	Level	Name
	SG6	R	9999	1	**Ship to level**
	SG12	R	9999	2	**Scheduled Article Details**
	SG13	R	1	3	**Order number**
19	**DTM**	O	1	4	**Referenced document's date**

		Standard		Implementation		
Tag	Name	St	Format	St	Format	Usage / Remark
DTM						
C507	Date/time/period	M		M		
2005	Date or time or period function code qualifier	M	an..3	M	an..3	**171 Reference date/time**
2380	Date or time or period text	C	an..35	R	an..35	Date on which a document or business signal was issued.
2379	Date or time or period format code	C	an..3	R	an..3	**102 CCYYMMDD**

Remark:
If no date is filled for this field, then this segment (DTM+171) is not sent.

Example:
```
DTM+171:20230101:102'
```

No = Consecutive segment number
MaxOcc = Maximum occurrence of the segment/group
St = Status, EDIFACT: M=Mandatory, C=Conditional
User specific: R=Required, O=Optional, D=Dependent, A=Advised, N=Not used

Segments

No	Tag	St	MaxOcc	Level	Name
	SG6	R	9999	1	**Ship to level**
	SG12	R	9999	2	**Scheduled Article Details**
	SG13	O	1	3	**Delivery instruction number new**
20	**RFF**	M	1	3	**Reference**

		Standard		Implementation		
Tag	Name	St	Format	St	Format	Usage / Remark
RFF						
C506	Reference	M		M		
1153	Reference code qualifier	M	an..3	M	an..3	**AAN Delivery schedule number**
1154	Reference identifier	C	an..70	R	an..17	Unique identifier of a document. Synonym: document number
1156	Document line identifier	C	an..6	N		Not used
4000	Reference version identifier	C	an..35	N		Not used
1060	Revision identifier	C	an..6	N		Not used

Remark:
Delivery instruction number new

Example:
```
RFF+AAN:20'
```

No = Consecutive segment number
MaxOcc = Maximum occurrence of the segment/group
St = Status, EDIFACT: M=Mandatory, C=Conditional
User specific: R=Required, O=Optional, D=Dependent, A=Advised, N=Not used

Segments

No	Tag	St	MaxOcc	Level	Name
	SG6	R	9999	1	**Ship to level**
	SG12	R	9999	2	**Scheduled Article Details**
	SG13	O	1	3	**Delivery instruction number new**
21	**DTM**	C	1	4	**Delivery instruction date**

		Standard		Implementation		
Tag	Name	St	Format	St	Format	Usage / Remark
DTM						
C507	Date/time/period	M		M		
2005	Date or time or period function code qualifier	M	an..3	M	an..3	**171 Reference date/time**
2380	Date or time or period text	C	an..35	R	an..35	Date on which a document or business signal was issued.
2379	Date or time or period format code	C	an..3	R	an..3	**102 CCYYMMDD**

Remark:

Example:

```
DTM+171:20230414:102'
```

No = Consecutive segment number
MaxOcc = Maximum occurrence of the segment/group
St = Status, EDIFACT: M=Mandatory, C=Conditional
User specific: R=Required, O=Optional, D=Dependent, A=Advised, N=Not used

Segments

No	Tag	St	MaxOcc	Level	Name
	SG6	R	9999	1	**Ship to level**
	SG12	R	9999	2	**Scheduled Article Details**
	SG13	O	1	3	**Delivery instruction number old**
22	**RFF**	M	1	3	**Delivery instruction number old**

		Standard		Implementation		
Tag	Name	St	Format	St	Format	Usage / Remark
RFF						
C506	Reference	M		M		
1153	Reference code qualifier	M	an..3	M	an..3	**AIF Previous delivery instruction number**
1154	Reference identifier	C	an..70	R	an..17	For call-offs without a previous call-off number "000000000" is always transmitted.
1156	Document line identifier	C	an..6	N		Not used
4000	Reference version identifier	C	an..35	N		Not used
1060	Revision identifier	C	an..6	N		Not used

Remark:

Example:

```
RFF+AIF:19'
```

No = Consecutive segment number
MaxOcc = Maximum occurrence of the segment/group
St = Status, EDIFACT: M=Mandatory, C=Conditional
User specific: R=Required, O=Optional, D=Dependent, A=Advised, N=Not used

Segments

No	Tag	St	MaxOcc	Level	Name
	SG6	R	9999	1	**Ship to level**
	SG12	R	9999	2	**Scheduled Article Details**
	SG13	O	1	3	**Delivery instruction number old**
23	**DTM**	C	1	4	**Delivery instruction date**

		Standard		Implementation		
Tag	Name	St	Format	St	Format	Usage / Remark
DTM						
C507	Date/time/period	M		M		
2005	Date or time or period function code qualifier	M	an..3	M	an..3	**171 Reference date/time**
2380	Date or time or period text	C	an..35	R	an..35	Date on which a document or business signal was issued.
2379	Date or time or period format code	C	an..3	R	an..3	**102 CCYYMMDD**

Remark:

Example:

```
DTM+171:20230410:102'
```

No = Consecutive segment number
MaxOcc = Maximum occurrence of the segment/group
St = Status, EDIFACT: M=Mandatory, C=Conditional
User specific: R=Required, O=Optional, D=Dependent, A=Advised, N=Not used

Segments

No	Tag	St	MaxOcc	Level	Name
	SG6	R	9999	1	**Ship to level**
	SG12	R	9999	2	**Scheduled Article Details**
	SG14	O	1	3	**Article related contact information**
24	**CTA**	M	1	3	**Contact information**

		Standard		Implementation		
Tag	Name	St	Format	St	Format	Usage / Remark
CTA						
3139	Contact function code	C	an..3	R	an..3	**SC Disponent / Scheduling contact**
C056	Department or employee details	C		R		
3413	Department or employee name code	C	an..17	O	an..17	Identifies the department or employee by a unique identifier other than their name when given as a contact.
3412	Department or employee name	C	an..35	O	an..35	Name of the contact person or department

Remark:
Article related information that identifies the contact person or department responsible for the scheduling of deliveries. This contact may change from item to item and is therefore related to the scheduled article level rather than to the ship-to level.

Example:
```
CTA+SC+1A3:Vorname, Name'
```

No = Consecutive segment number
MaxOcc = Maximum occurrence of the segment/group
St = Status, EDIFACT: M=Mandatory, C=Conditional
User specific: R=Required, O=Optional, D=Dependent, A=Advised, N=Not used

Segments

No	Tag	St	MaxOcc	Level	Name
	SG6	R	9999	1	**Ship to level**
	SG12	R	9999	2	**Scheduled Article Details**
	SG14	O	1	3	**Article related contact information**
25	**COM**	O	2	4	**Communication contact**

		Standard		Implementation		
Tag	Name	St	Format	St	Format	Usage / Remark
COM						
C076	Communication contact	M		M		
3148	Communication address identifier	M	an..512	M	an..100	Telephone number, fax number or email address
3155	Communication address code qualifier	M	an..3	M	an..3	**EM Electronic mail** **TE Telephone**

Remark:

Example:

```
COM+Name.Vorname@brose.com:EM'
```

No = Consecutive segment number
MaxOcc = Maximum occurrence of the segment/group
St = Status, EDIFACT: M=Mandatory, C=Conditional
User specific: R=Required, O=Optional, D=Dependent, A=Advised, N=Not used

Segments

No	Tag	St	MaxOcc	Level	Name
	SG6	R	9999	1	**Ship to level**
	SG12	R	9999	2	**Scheduled Article Details**
	SG16	O	1	3	**Delivery balance**
26	**QTY**	M	1	3	**Delivery balance quantity**

		Standard		Implementation		
Tag	Name	St	Format	St	Format	Usage / Remark
QTY						
C186	Quantity details	M		M		
6063	Quantity type code qualifier	M	an..3	M	an..3	**83 Rückstand / Backorder**
6060	Quantity	M	an..35	M	n..15	Difference between quantity scheduled and quantity received. For positive values, the quantity scheduled is greater than the quantity received i.e. there is a backorder quantity.
6411	Measurement unit code	C	an..8	R	an..8	Code specifying the unit of measurement, use UN/ECE Recommendation 20, Common code. **C62 one** **DR drum** **GRM gram** **KGM kilogram** **KMT kilometre** **LTR litre** **MLT millilitre** **MMT millimetre** **MTK square metre** **MTQ cubic metre** **MTR metre** **PCE piece** **PR pair** **RO roll** **SET set** **TNE tonne (metric ton)** PCE and C62 are synonymous for piece

Remark:

Example:

```
QTY+83:800:PCE'
```

No = Consecutive segment number
MaxOcc = Maximum occurrence of the segment/group
St = Status, EDIFACT: M=Mandatory, C=Conditional
User specific: R=Required, O=Optional, D=Dependent, A=Advised, N=Not used

Segments

No	Tag	St	MaxOcc	Level	Name
	SG6	R	9999	1	**Ship to level**
	SG12	R	9999	2	**Scheduled Article Details**
	SG16	O	1	3	**Cumulative quantity received**
27	**QTY**	M	1	3	**Cumulative quantity received**

		Standard		Implementation		
Tag	Name	St	Format	St	Format	Usage / Remark
QTY						
C186	Quantity details	M		M		
6063	Quantity type code qualifier	M	an..3	M	an..3	Code 70 - cumulative quantity received (taking into account the last received shipments) = German abbreviation EFZ (Eingangsfortschrittszahl) **70 Cumulative quantity received**
6060	Quantity	M	an..35	R	n..15	Cumulative quantity
6411	Measurement unit code	C	an..8	R	an..8	Code specifying the unit of measurement, use UN/ECE Recommendation 20, Common code. **C62 one** **PCE piece** **SET set** **MTR metre** **MTK square metre** **MTQ cubic metre** **LTR litre** **TNE tonne (metric ton)** **KGM kilogram** **KMT kilometre** **GRM gram** **MLT millilitre** **MMT millimetre** **PR pair** **RO roll** **DR drum** PCE and C62 are synonymous for piece

Remark:

Example:

```
QTY+70:1000:PCE'
```

No = Consecutive segment number
MaxOcc = Maximum occurrence of the segment/group
St = Status, EDIFACT: M=Mandatory, C=Conditional
User specific: R=Required, O=Optional, D=Dependent, A=Advised, N=Not used

Segments

No	Tag	St	MaxOcc	Level	Name
	SG6	R	9999	1	**Ship to level**
	SG12	R	9999	2	**Scheduled Article Details**
	SG16	O	1	3	**Cumulative quantity received**
28	**DTM**	O	1	4	**Cumulative quantity date(s)**

		Standard		Implementation		
Tag	Name	St	Format	St	Format	Usage / Remark
DTM						
C507	Date/time/period	M		M		
2005	Date or time or period function code qualifier	M	an..3	M	an..3	**51 Cumulative quantity start date**
2380	Date or time or period text	C	an..35	R	an..35	Start date of a given period
2379	Date or time or period format code	C	an..3	R	an..3	**102 CCYYMMDD**

Remark:
If no date is filled for this field, then this segment (DTM+51) is not sent.

Example:
```
DTM+51:00000000:102'
```

No = Consecutive segment number
MaxOcc = Maximum occurrence of the segment/group
St = Status, EDIFACT: M=Mandatory, C=Conditional
User specific: R=Required, O=Optional, D=Dependent, A=Advised, N=Not used

Segments

No	Tag	St	MaxOcc	Level	Name
	SG6	R	9999	1	**Ship to level**
	SG12	R	9999	2	**Scheduled Article Details**
	SG16	O	1	3	**Cumulative quantity ordered**
29	**QTY**	M	1	3	**Cumulative quantity ordered**

		Standard		Implementation		
Tag	Name	St	Format	St	Format	Usage / Remark
QTY						
C186	Quantity details	M		M		
6063	Quantity type code qualifier	M	an..3	M	an..3	Code 71 - information is forecast related and not based on shipments / receipts **71 Cumulative quantity ordered**
6060	Quantity	M	an..35	R	n..15	Cumulative quantity
6411	Measurement unit code	C	an..8	R	an..8	Code specifying the unit of measurement, use UN/ECE Recommendation 20, Common code. PCE and C62 are synonymous for piece **C62 one** **PCE piece** **SET set** **MTR metre** **MTK square metre** **MTQ cubic metre** **LTR litre** **TNE tonne (metric ton)** **KGM kilogram** **KMT kilometre** **GRM gram** **MLT millilitre** **MMT millimetre** **PR pair** **RO roll** **DR drum**

Remark:

Example:

```
QTY+71:22200:PCE'
```

No = Consecutive segment number
MaxOcc = Maximum occurrence of the segment/group
St = Status, EDIFACT: M=Mandatory, C=Conditional
User specific: R=Required, O=Optional, D=Dependent, A=Advised, N=Not used

Segments

No	Tag	St	MaxOcc	Level	Name
	SG6	R	9999	1	**Ship to level**
	SG12	R	9999	2	**Scheduled Article Details**
	SG16	O	1	3	**Cumulative quantity ordered**
30	**DTM**	O	1	4	**Cumulative quantity date for Gross demand**

		Standard		Implementation		
Tag	Name	St	Format	St	Format	Usage / Remark
DTM						
C507	Date/time/period	M		M		
2005	Date or time or period function code qualifier	M	an..3	M	an..3	**51 Cumulative quantity start date**
2380	Date or time or period text	C	an..35	R	an..35	Start date of a given period
2379	Date or time or period format code	C	an..3	R	an..3	**102 CCYYMMDD**

Remark:
If no date is filled for this field, then this segment (DTM+51) is not sent.

Example:
```
DTM+51:00000000:102'
```

No = Consecutive segment number
MaxOcc = Maximum occurrence of the segment/group
St = Status, EDIFACT: M=Mandatory, C=Conditional
User specific: R=Required, O=Optional, D=Dependent, A=Advised, N=Not used

Segments

No	Tag	St	MaxOcc	Level	Name
	SG6	R	9999	1	**Ship to level**
	SG12	R	9999	2	**Scheduled Article Details**
	SG16	O	3	3	**Most recent arrival(s) of goods**
31	**QTY**	M	1	3	**Received quantity**

		Standard		Implementation		
Tag	Name	St	Format	St	Format	Usage / Remark
QTY						
C186	Quantity details	M		M		
6063	Quantity type code qualifier	M	an..3	M	an..3	**194 Received and accepted**
6060	Quantity	M	an..35	M	n..15	The quantity received and booked by the ship-to party.
6411	Measurement unit code	C	an..8	R	an..8	Code specifying the unit of measurement, use UN/ECE Recommendation 20, Common code. **C62 one** **PCE piece** **SET set** **MTR metre** **MTK square metre** **MTQ cubic metre** **LTR litre** **TNE tonne (metric ton)** **KGM kilogram** **KMT kilometre** **GRM gram** **MLT millilitre** **MMT millimetre** **PR pair** **RO roll** **DR drum** PCE and C62 are synonymous for piece

Remark:
Usually up to 3 arrivals are reported

Example:
```
QTY+194:1000:PCE'
```

No = Consecutive segment number
MaxOcc = Maximum occurrence of the segment/group
St = Status, EDIFACT: M=Mandatory, C=Conditional
User specific: R=Required, O=Optional, D=Dependent, A=Advised, N=Not used

Segments

No	Tag	St	MaxOcc	Level	Name
	SG6	R	9999	1	**Ship to level**
	SG12	R	9999	2	**Scheduled Article Details**
	SG16	O	3	3	**Most recent arrival(s) of goods**
	SG17	O	1	4	**Last received delivery note number**
32	**RFF**	M	1	4	**Last received delivery note number**

		Standard		Implementation		
Tag	Name	St	Format	St	Format	Usage / Remark
RFF						
C506	Reference	M		M		
1153	Reference code qualifier	M	an..3	M	an..3	**AAU Despatch note document identifier**
1154	Reference identifier	C	an..70	R	an..35	Unique identifier of the despatch advice
1156	Document line identifier	C	an..6	N		Not used
4000	Reference version identifier	C	an..35	N		Not used
1060	Revision identifier	C	an..6	N		Not used

Remark:
Reference identifier assigned by the issuer to the document for a despatch advice

Example:
```
RFF+AAU:83562847'
```

No = Consecutive segment number
MaxOcc = Maximum occurrence of the segment/group
St = Status, EDIFACT: M=Mandatory, C=Conditional
User specific: R=Required, O=Optional, D=Dependent, A=Advised, N=Not used

Segments

No	Tag	St	MaxOcc	Level	Name
	SG6	R	9999	1	**Ship to level**
	SG12	R	9999	2	**Scheduled Article Details**
	SG16	O	3	3	**Most recent arrival(s) of goods**
	SG17	O	1	4	**Last received delivery note number**
33	**DTM**	O	1	5	**Delivery note date**

		Standard		Implementation		
Tag	Name	St	Format	St	Format	Usage / Remark
DTM						
C507	Date/time/period	M		M		
2005	Date or time or period function code qualifier	M	an..3	M	an..3	**171 Reference date/time**
2380	Date or time or period text	C	an..35	R	an..35	Date, on which a document or business signal was issued.
2379	Date or time or period format code	C	an..3	R	an..3	**102 CCYYMMDD**

Remark:

Example:

```
DTM+171:20230322:102'
```

No = Consecutive segment number
MaxOcc = Maximum occurrence of the segment/group
St = Status, EDIFACT: M=Mandatory, C=Conditional
User specific: R=Required, O=Optional, D=Dependent, A=Advised, N=Not used

Segments

No	Tag	St	MaxOcc	Level	Name
	SG6	R	9999	1	**Ship to level**
	SG12	R	9999	2	**Scheduled Article Details**
	SG18	O	999	3	**Sofortbedard**
34	**SCC**	M	1	3	**Scheduling conditions**

		Standard		Implementation		
Tag	Name	St	Format	St	Format	Usage / Remark
SCC						
4017	Delivery plan commitment level code	M	an..3	M	an..3	**10 Immediate** Code indicating the level of commitment of a delivery instruction. Code 10 - immediate requirements - to be used with SG-QTY.QTY+84. Immediate requirements are additional, they have not been tranmitted as demand in any previous delivery instruction.
4493	Delivery instruction code	C	an..3	N		Not used
C329	Pattern description	C		N		
2013	Frequency code	C	an..3	N		Not used
2015	Despatch pattern code	C	an..3	N		Not used
2017	Despatch pattern timing code	C	an..3	N		Not used

Remark:
Information providing dates/times/periods of deliveries, quantities, and additional references valid for the item.
Delivery Date and Delivery Period shall be used mutually exclusive.

Example:
```
SCC+10'
```

No = Consecutive segment number
MaxOcc = Maximum occurrence of the segment/group
St = Status, EDIFACT: M=Mandatory, C=Conditional
User specific: R=Required, O=Optional, D=Dependent, A=Advised, N=Not used

Segments

No	Tag	St	MaxOcc	Level	Name
	SG6	R	9999	1	**Ship to level**
	SG12	R	9999	2	**Scheduled Article Details**
	SG18	O	999	3	**Sofortbedard**
	SG19	R	999	4	**Urgent delivery quantity**
35	**QTY**	M	1	4	**Quantity**

		Standard		Implementation		
Tag	Name	St	Format	St	Format	Usage / Remark
QTY						
C186	Quantity details	M		M		
6063	Quantity type code qualifier	M	an..3	M	an..3	**84 Urgent delivery quantity** 84 - immediate requirement; the DTM segment should contain the date of the delivery instruction
6060	Quantity	M	an..35	M	n..15	Quantity scheduled by the buyer (material release issuer) to be delivered at a specified point in time or within a period.
6411	Measurement unit code	C	an..8	R	an..8	Code specifying the unit of measurement, use UN/ECE Recommendation 20, Common code. **C62 one** **PCE piece** **SET set** **MTR metre** **MTK square metre** **MTQ cubic metre** **LTR litre** **TNE tonne (metric ton)** **KGM kilogram** **KMT kilometre** **GRM gram** **MLT millilitre** **MMT millimetre** **PR pair** **RO roll** **DR drum** PCE und C62 sind Synonym für Stück. PCE and C62 are synonymous for piece

Remark:

Example:

```
QTY+84:4500:PCE'
```

No = Consecutive segment number
MaxOcc = Maximum occurrence of the segment/group
St = Status, EDIFACT: M=Mandatory, C=Conditional
User specific: R=Required, O=Optional, D=Dependent, A=Advised, N=Not used

Segments

No	Tag	St	MaxOcc	Level	Name
	SG6	R	9999	1	**Ship to level**
	SG12	R	9999	2	**Scheduled Article Details**
	SG18	O	999	3	**Sofortbedard**
	SG19	R	999	4	**Urgent delivery quantity**
36	**DTM**	R	1	5	**Scheduled date(s)**

		Standard		Implementation		
Tag	Name	St	Format	St	Format	Usage / Remark
DTM						
C507	Date/time/period	M		M		
2005	Date or time or period function code qualifier	M	an..3	R	an..3	**2 Delivery date/time, requested**
2380	Date or time or period text	C	an..35	R	an..35	Date / period
2379	Date or time or period format code	C	an..3	O	an..3	**102 CCYYMMDD** **203 CCYYMMDDHHMM**

Remark:
For fixed dates/times the qualifier 2 is used.

Example:
```
DTM+2:20230430:102'
```

No = Consecutive segment number
MaxOcc = Maximum occurrence of the segment/group
St = Status, EDIFACT: M=Mandatory, C=Conditional
User specific: R=Required, O=Optional, D=Dependent, A=Advised, N=Not used

Segments

No	Tag	St	MaxOcc	Level	Name
	SG6	R	9999	1	**Ship to level**
	SG12	R	9999	2	**Scheduled Article Details**
	SG18	R	999	3	**To be shipped**
37	**SCC**	M	1	3	**Scheduling conditions**

		Standard		Implementation		
Tag	Name	St	Format	St	Format	Usage / Remark
SCC						
4017	Delivery plan commitment level code	M	an..3	M	an..3	**4 Planning/forecast** Code indicating the level of commitment of a delivery instruction.
4493	Delivery instruction code	C	an..3	N		Not used
C329	Pattern description	C		N		
2013	Frequency code	C	an..3	N		Not used
2015	Despatch pattern code	C	an..3	N		Not used
2017	Despatch pattern timing code	C	an..3	N		Not used

Remark:
Information providing dates/times/periods of deliveries, quantities, and additional references valid for the item.
Delivery Date and Delivery Period shall be used mutually exclusive.

Example:
```
SCC+4'
```

No = Consecutive segment number
MaxOcc = Maximum occurrence of the segment/group
St = Status, EDIFACT: M=Mandatory, C=Conditional
User specific: R=Required, O=Optional, D=Dependent, A=Advised, N=Not used

Segments

No	Tag	St	MaxOcc	Level	Name
	SG6	R	9999	1	**Ship to level**
	SG12	R	9999	2	**Scheduled Article Details**
	SG18	R	999	3	**To be shipped**
	SG19	R	999	4	**Scheduled quantity**
38	**QTY**	M	1	4	**Quantity**

		Standard		Implementation		
Tag	Name	St	Format	St	Format	Usage / Remark
QTY						
C186	Quantity details	M		M		
6063	Quantity type code qualifier	M	an..3	M	an..3	**113 Quantity to be delivered**
6060	Quantity	M	an..35	M	n..15	Quantity scheduled by the buyer (material release issuer) to be delivered at a specified point in time or within a period.
6411	Measurement unit code	C	an..8	R	an..8	Code specifying the unit of measurement, use UN/ECE Recommendation 20, Common code. **C62 one** **PCE piece** **SET set** **MTR metre** **MTK square metre** **MTQ cubic metre** **LTR litre** **TNE tonne (metric ton)** **KGM kilogram** **KMT kilometre** **GRM gram** **MLT millilitre** **MMT millimetre** **PR pair** **RO roll** **DR drum** PCE und C62 sind Synonym für Stück. PCE and C62 are synonymous for piece

Remark:

Example:

```
QTY+113:800:PCE'
```

No = Consecutive segment number
MaxOcc = Maximum occurrence of the segment/group
St = Status, EDIFACT: M=Mandatory, C=Conditional
User specific: R=Required, O=Optional, D=Dependent, A=Advised, N=Not used

Segments

No	Tag	St	MaxOcc	Level	Name
	SG6	R	9999	1	**Ship to level**
	SG12	R	9999	2	**Scheduled Article Details**
	SG18	R	999	3	**To be shipped**
	SG19	R	999	4	**Scheduled quantity**
39	**DTM**	R	1	5	**Scheduled date(s)**

		Standard		Implementation		
Tag	Name	St	Format	St	Format	Usage / Remark
DTM						
C507	Date/time/period	M		M		
2005	Date or time or period function code qualifier	M	an..3	R	an..3	**2 Delivery date/time, requested**
2380	Date or time or period text	C	an..35	R	an..35	Date / period
2379	Date or time or period format code	C	an..3	O	an..3	**102 CCYYMMDD** **203 CCYYMMDDHHMM**

Remark:
For fixed dates/times the qualifier 2 is used.

Example:
```
DTM+2:20230418:102'
```

No = Consecutive segment number
MaxOcc = Maximum occurrence of the segment/group
St = Status, EDIFACT: M=Mandatory, C=Conditional
User specific: R=Required, O=Optional, D=Dependent, A=Advised, N=Not used

Segments

No	Tag	St	MaxOcc	Level	Name
	SG6	R	9999	1	**Ship to level**
	SG12	R	9999	2	**Scheduled Article Details**
	SG18	R	999	3	**To be shipped**
	SG19	R	999	4	**Scheduled quantity**
40	**DTM**	D	1	5	**Scheduled date(s)**

		Standard		Implementation		
Tag	Name	St	Format	St	Format	Usage / Remark
DTM						
C507	Date/time/period	M		M		
2005	Date or time or period function code qualifier	M	an..3	R	an..3	**64 Delivery date/time, earliest**
2380	Date or time or period text	C	an..35	R	an..35	Date / period
2379	Date or time or period format code	C	an..3	O	an..3	**102 CCYYMMDD** **203 CCYYMMDDHHMM**

Remark:
For periods (e.g. for forecast data related to a week or month) the qualifiers 63 an 64 are used.

Example:
```
DTM+64:20230418:102'
```

No = Consecutive segment number
MaxOcc = Maximum occurrence of the segment/group
St = Status, EDIFACT: M=Mandatory, C=Conditional
User specific: R=Required, O=Optional, D=Dependent, A=Advised, N=Not used

Segments

No	Tag	St	MaxOcc	Level	Name
	SG6	R	9999	1	**Ship to level**
	SG12	R	9999	2	**Scheduled Article Details**
	SG18	R	999	3	**To be shipped**
	SG19	R	999	4	**Scheduled quantity**
41	**DTM**	D	1	5	**Scheduled date(s)**

		Standard		Implementation		
Tag	Name	St	Format	St	Format	Usage / Remark
DTM						
C507	Date/time/period	M		M		
2005	Date or time or period function code qualifier	M	an..3	R	an..3	**63 Delivery date time, last**
2380	Date or time or period text	C	an..35	R	an..35	Date / period
2379	Date or time or period format code	C	an..3	O	an..3	**102 CCYYMMDD** **203 CCYYMMDDHHMM**

Remark:
For periods (e.g. for forecast data related to a week or month) the qualifiers 63 an 64 are used.

Example:
```
DTM+63:20230420:102'
```

No = Consecutive segment number
MaxOcc = Maximum occurrence of the segment/group
St = Status, EDIFACT: M=Mandatory, C=Conditional
User specific: R=Required, O=Optional, D=Dependent, A=Advised, N=Not used

Segments

No	Tag	St	MaxOcc	Level	Name
	SG6	R	9999	1	**Ship to level**
	SG12	R	9999	2	**Scheduled Article Details**
	SG18	O	999	3	**Authorization / Commitment**
42	**SCC**	M	1	3	**Scheduling conditions**

		Standard		Implementation		
Tag	Name	St	Format	St	Format	Usage / Remark
SCC						
4017	Delivery plan commitment level code	M	an..3	M	an..3	**2 Commitment for manufacturing and material** Code indicating the buyer's level of commitment for the cumulative quantities scheduled.
4493	Delivery instruction code	C	an..3	N		Not used
C329	Pattern description	C		N		
2013	Frequency code	C	an..3	N		Not used
2015	Despatch pattern code	C	an..3	N		Not used
2017	Despatch pattern timing code	C	an..3	N		Not used

Remark:
Providing the level of commitment of the buyer, per type of commitment.
The authorisation may be given: -
- as a discrete quantity
- for a period in terms of start and end date
- for a period in terms of number of periods

Example:
```
SCC+2'
```

No = Consecutive segment number
MaxOcc = Maximum occurrence of the segment/group
St = Status, EDIFACT: M=Mandatory, C=Conditional
User specific: R=Required, O=Optional, D=Dependent, A=Advised, N=Not used

Segments

No	Tag	St	MaxOcc	Level	Name
	SG6	R	9999	1	**Ship to level**
	SG12	R	9999	2	**Scheduled Article Details**
	SG18	O	999	3	**Authorization / Commitment**
	SG19	O	999	4	**Date(s) and quantities**
43	**QTY**	M	1	4	**Quantity**

		Standard		Implementation		
Tag	Name	St	Format	St	Format	Usage / Remark
QTY						
C186	Quantity details	M		M		
6063	Quantity type code qualifier	M	an..3	M	an..3	**113 Quantity to be delivered**
6060	Quantity	M	an..35	M	n..15	Always quantity "0" when using SAP as ERP-system. The material and production authorisation for the period, defined in the following DTM segment.
6411	Measurement unit code	C	an..8	R	an..8	Code specifying the unit of measurement, use UN/ECE Recommendation 20, Common code. PCE and C62 are synonymous for piece **C62 one** **PCE piece** **SET set** **MTR metre** **MTK square metre** **MTQ cubic metre** **LTR litre** **TNE tonne (metric ton)** **KGM kilogram** **KMT kilometre** **GRM gram** **MLT millilitre** **MMT millimetre** **PR pair** **RO roll** **DR drum**

Remark:

Example:

```
QTY+113:0:PCE'
```

No = Consecutive segment number
MaxOcc = Maximum occurrence of the segment/group
St = Status, EDIFACT: M=Mandatory, C=Conditional
User specific: R=Required, O=Optional, D=Dependent, A=Advised, N=Not used

Segments

No	Tag	St	MaxOcc	Level	Name
	SG6	R	9999	1	**Ship to level**
	SG12	R	9999	2	**Scheduled Article Details**
	SG18	O	999	3	**Authorization / Commitment**
	SG19	O	999	4	**Date(s) and quantities**
44	**DTM**	O	1	5	**Authorisation period**

		Standard		Implementation		
Tag	Name	St	Format	St	Format	Usage / Remark
DTM						
C507	Date/time/period	M		M		
2005	Date or time or period function code qualifier	M	an..3	M	an..3	Only end date is sent here. **206 End date/time**
2380	Date or time or period text	C	an..35	R	an..35	End date of an authorisation period. When plant is using SAP as ERP-system, all SCC+4 requirements until that date will be covered by the material and production authorisation.
2379	Date or time or period format code	C	an..3	O	an..3	**102 CCYYMMDD**

Remark:

Example:

```
DTM+206:20230430:102'
```

No = Consecutive segment number
MaxOcc = Maximum occurrence of the segment/group
St = Status, EDIFACT: M=Mandatory, C=Conditional
User specific: R=Required, O=Optional, D=Dependent, A=Advised, N=Not used

Segments

No	Tag	St	MaxOcc	Level	Name
	SG6	R	9999	1	**Ship to level**
	SG12	R	9999	2	**Scheduled Article Details**
	SG18	O	999	3	**Authorization / Commitment**
45	**SCC**	M	1	3	**Scheduling conditions**

		Standard		Implementation		
Tag	Name	St	Format	St	Format	Usage / Remark
SCC						
4017	Delivery plan commitment level code	M	an..3	M	an..3	Code indicating the buyer's level of commitment for the cumulative quantities scheduled. **3 Commitment for material**
4493	Delivery instruction code	C	an..3	N		Not used
C329	Pattern description	C		N		
2013	Frequency code	C	an..3	N		Not used
2015	Despatch pattern code	C	an..3	N		Not used
2017	Despatch pattern timing code	C	an..3	N		Not used

Remark:
Providing the level of commitment of the buyer, per type of commitment.
The authorisation may be given: -
- as a discrete quantity
- for a period in terms of start and end date
- for a period in terms of number of periods

Example:
```
SCC+3'
```

No = Consecutive segment number
MaxOcc = Maximum occurrence of the segment/group
St = Status, EDIFACT: M=Mandatory, C=Conditional
User specific: R=Required, O=Optional, D=Dependent, A=Advised, N=Not used

Segments

No	Tag	St	MaxOcc	Level	Name
	SG6	R	9999	1	**Ship to level**
	SG12	R	9999	2	**Scheduled Article Details**
	SG18	O	999	3	**Authorization / Commitment**
	SG19	O	999	4	**Date(s) and quantities**
46	**QTY**	M	1	4	**Quantity**

		Standard		Implementation		
Tag	Name	St	Format	St	Format	Usage / Remark
QTY						
C186	Quantity details	M		M		
6063	Quantity type code qualifier	M	an..3	M	an..3	**113 Quantity to be delivered**
6060	Quantity	M	an..35	M	n..15	Discrete quantity of materials or finished goods authorised to be produced or purchased to meet the expected requirements of the buyer as committed in a forecast or schedule. Always quantity "0" when using SAP as ERP-system. The material and production authorisation for the period, defined in the following DTM segment.
6411	Measurement unit code	C	an..8	R	an..8	Code specifying the unit of measurement, use UN/ECE Recommendation 20, Common code. PCE and C62 are synonymous for piece **C62 one** **PCE piece** **SET set** **MTR metre** **MTK square metre** **MTQ cubic metre** **LTR litre** **TNE tonne (metric ton)** **KGM kilogram** **KMT kilometre** **GRM gram** **MLT millilitre** **MMT millimetre** **PR pair** **RO roll** **DR drum**

Remark:

Example:
```
QTY+113:0:PCE'
```

No = Consecutive segment number
MaxOcc = Maximum occurrence of the segment/group
St = Status, EDIFACT: M=Mandatory, C=Conditional
User specific: R=Required, O=Optional, D=Dependent, A=Advised, N=Not used

Segments

No	Tag	St	MaxOcc	Level	Name
	SG6	R	9999	1	**Ship to level**
	SG12	R	9999	2	**Scheduled Article Details**
	SG18	O	999	3	**Authorization / Commitment**
	SG19	O	999	4	**Date(s) and quantities**
47	**DTM**	O	1	5	**Authorisation period**

		Standard		Implementation		
Tag	Name	St	Format	St	Format	Usage / Remark
DTM						
C507	Date/time/period	M		M		
2005	Date or time or period function code qualifier	M	an..3	M	an..3	**206 End date/time** Only end date is sent here.
2380	Date or time or period text	C	an..35	R	an..35	End date of an authorisation period. When plant is using SAP as ERP-system, all SCC+4 requirements between SCC+2 date and SCC+3 date will be covered by the material authorisation.
2379	Date or time or period format code	C	an..3	O	an..3	**102 CCYYMMDD**

Remark:
Approvals for a week or a month are indicated with start and end dates.

Example:
```
DTM+206:20230630:102'
```

No = Consecutive segment number
MaxOcc = Maximum occurrence of the segment/group
St = Status, EDIFACT: M=Mandatory, C=Conditional
User specific: R=Required, O=Optional, D=Dependent, A=Advised, N=Not used

Segments

No	Tag	St	MaxOcc	Level	Name
48	**UNT**	M	1	0	**Message trailer**

		Standard		Implementation		
Tag	Name	St	Format	St	Format	Usage / Remark
UNT						
0074	Number of segments in the message	M	n..6	M	n..6	
0062	Message reference number	M	an..14	M	an..14	Repetition of the value in UNH, DE 0062

Remark:

Example:

```
UNT+46+1'
```

No = Consecutive segment number
MaxOcc = Maximum occurrence of the segment/group
St = Status, EDIFACT: M=Mandatory, C=Conditional
User specific: R=Required, O=Optional, D=Dependent, A=Advised, N=Not used

Segments

No	Tag	St	MaxOcc	Level	Name
49	**UNZ**	M	1	0	**Interchange trailer**

		Standard		Implementation		
Tag	Name	St	Format	St	Format	Usage / Remark
UNZ						
0036	Interchange control count	M	n..6	M	n..6	Number of messages in the interchange.
0020	Interchange control reference	M	an..14	M	an..14	Repetition of the value transmitted in UNB data element 0020.

Remark:
Adaptation to S3 compliant profile of EDIFACT S4 (ISO 9735 Part 11).

Example:
```
UNZ+1+305384'
```

No = Consecutive segment number
MaxOcc = Maximum occurrence of the segment/group
St = Status, EDIFACT: M=Mandatory, C=Conditional
User specific: R=Required, O=Optional, D=Dependent, A=Advised, N=Not used

```
UNA:+.?'
UNB+UNOC:X+O0013000428BROSE+012345678:01+20230414:1455+305384'
UNH+1+DELFOR:D:04A:UN:GAVB30'
BGM+241::6+20+9'
DTM+137:20230414:102'
DTM+2'
FTX+AAI+++Text 1:Text 2:Text 3:Text 4:Text 5+DE'
NAD+BY+04547::91++Brose México, S.A. de C.V.+Calle 2 No. 7, Fracc. Ind. Benito
J:+Querétaro, México++76120+MX'
NAD+SE+0000001234::92++Lieferant Muster+CO.KG+Musterstr. 20-
30+Musterstadt++51399+DE'
GEI+3+37'
NAD+ST+1025::92++Rauh Spedition & Logistik GmbH+Hans Rauh Straße
1+Großheirath++96269+DE'
LOC+11+RAUKC::92'
LIN+++A62404-110:IN'
PIA+1+123456:SA'
IMD+F++:::Entkopplungsring LA-BS-ELLIP-1_-CD4__-D::DE'
LOC+159+5620::92'
FTX+AAI+++Text1:Text2:Text3:Text4:Text5+DE'
RFF+ON:5508856298'
RFF+AAN:20'
DTM+171:20230414:102'
RFF+AIF:19'
DTM+171:20230410:102'
CTA+SC+1A3:Vorname, Name'
COM+06444-21215:TE'
COM+Name.Vorname@brose.com:EM'
QTY+83:800:PCE'
QTY+70:1000:PCE'
QTY+71:22200:PCE'
QTY+194:1000:PCE'
RFF+AAU:83562847'
DTM+171:20230322:102'
QTY+194:1000:PCE'
RFF+AAU:83562846'
DTM+171:20230318:102'
QTY+194:1000:PCE'
RFF+AAU:83562845'
DTM+171:20230314:102'
SCC+10'
QTY+84:400:PCE'
DTM+2:20230404:102'
```

No = Consecutive segment number
MaxOcc = Maximum occurrence of the segment/group
St = Status, EDIFACT: M=Mandatory, C=Conditional
User specific: R=Required, O=Optional, D=Dependent, A=Advised, N=Not used

```
SCC+4'
QTY+113:800:PCE'
DTM+2:20230418:102'
QTY+113:1000:PCE'
DTM+2:20230421:102'
QTY+113:1000:PCE'
DTM+2:20230425:102'
QTY+113:1000:PCE'
DTM+2:20230428:102'
QTY+113:1000:PCE'
DTM+2:20230505:102'
QTY+113:1000:PCE'
DTM+2:20230512:102'
QTY+113:1000:PCE'
DTM+2:20230519:102'
QTY+113:1000:PCE'
DTM+64:20230615:102'
DTM+63:20230618:102'
QTY+113:2000:PCE'
DTM+64:20230619:102'
DTM+63:20230625:102'
QTY+113:3000:PCE'
DTM+64:20230626:102'
DTM+63:20230702:102'
QTY+113:3000:PCE'
DTM+64:20230703:102'
DTM+63:20230709:102'
QTY+113:3000:PCE'
DTM+64:20230710:102'
DTM+63:20230716:102'
QTY+113:3000:PCE'
DTM+64:20230717:102'
DTM+63:20230723:102'
SCC+2'
QTY+113:0:PCE'
DTM+206:20230430:102'
SCC+3'
QTY+113:0:PCE'
DTM+206:20230630:102'
UNT+78+1'
UNZ+1+305384'
```

No = Consecutive segment number
MaxOcc = Maximum occurrence of the segment/group
St = Status, EDIFACT: M=Mandatory, C=Conditional
User specific: R=Required, O=Optional, D=Dependent, A=Advised, N=Not used