Message Implementation Guideline

VDA 4987 T2 - Global DESADV

based on

DESADV
Despatch advice message

UN D.20B S4 - S3 Profile (Part 11)

Version:	VDA 3.0
Variant:	Brose 1.0
Issue date:	31/01/2024
Author:	Brose

Message structure 2
Branching diagram 4
Segments 15

Structure / Table of Contents

No	Tag	St	MaxOcc	Level	Content
1	**UNA**	R	1	0	Service string advice
2	**UNB**	M	1	0	Interchange header
3	**UNH**	M	1	0	Message header
4	**BGM**	M	1	0	Beginning of message
5	**DTM**	R	1	1	Despatch advice date
6	**DTM**	R	1	1	Despatch date
7	**DTM**	R	1	1	Estimated arrival date
8	**MEA**	R	1	1	Consignment's gross weight
9	**MEA**	R	1	1	Consignment's net weight
10	**MEA**	O	1	1	Consignment volume (Total cube)
11	**MEA**	R	1	1	Number of handling units in shipment
	SG1	R	1	1	Shipment number, assigned by supplier
12	**RFF**	M	1	1	Shipment number, assigned by supplier
	SG1	D	1	1	Transport ID, assigned by customer
13	**RFF**	M	1	1	Transport ID, assigned by customer
	SG2	O	1	1	Buyer
14	**NAD**	M	1	1	Buyer's name and address
	SG2	D	1	1	Seller / Supplier
15	**NAD**	M	1	1	Seller's name and address
	SG3	R	1	2	Additional Party ID (DUNS)
16	**RFF**	M	1	2	Reference
	SG2	R	1	1	Ship to
17	**NAD**	M	1	1	Ship to's name and address
18	**LOC**	R	1	2	Place of discharge
	SG5	R	1	1	Terms of delivery
19	**TOD**	M	1	1	Terms of delivery or transport
20	**LOC**	O	1	2	Incoterms place
21	**FTX**	O	1	2	Preference information
	SG6	O	1	1	Means of transport at departure
22	**TDT**	M	1	1	Transport information related to pick-up
	SG11	O	9999	1	Despatch control line / List of handling unit groups
23	**CPS**	M	1	1	Handling unit / intermediate packaging level
	SG12	R	1	2	Handling unit group details
24	**PAC**	M	1	2	Quantity, type and ownership identifier
25	**QTY**	R	1	3	Number of contained inner package items
	SG14	R	1000	3	List of individual handling units
26	**PCI**	M	1	3	Handling unit label type
	SG16	R	1	4	Individual handling unit's transport label number
27	**GIN**	M	1	4	Individual handling unit's transport label number
	SG16	R	97	4	Label / package ID of contained packaging items
28	**GIN**	M	1	4	Individual packaging item's label numbers
	SG17	O	1	4	Individual handling unit's weights and quantity of parts (optional)
29	**COD**	M	1	4	Trigger segment

No = Consecutive segment number, MaxOcc = Maximum occurrence of the segment/group
St = Status, EDIFACT: M=Mandatory, C=Conditional
User specific: R=Required, O=Optional, D=Dependent, A=Advised, N=Not used

Structure / Table of Contents

No	Tag	St	MaxOcc	Level	Content
30	**MEA**	R	1	5	Gross weight of the (individual) transport loading unit
31	**MEA**	R	1	5	Net weight of the (individual) transport loading unit
32	**QTY**	D	9	5	Quantity of parts in homogeneous handling units.
	SG12	O	9999	2	Packaging aid
33	**PAC**	M	1	2	Packaging aid
	SG11	R	9999	1	Despatch control line / group of inner packaging items article identif
34	**CPS**	M	1	1	Consignment packing sequence
	SG12	O	1	2	Group of inner packaging items
35	**PAC**	M	1	2	Package
36	**MEA**	R	1	3	Gross weight of the (individual) packaging item
37	**MEA**	R	1	3	Net weight of the (individual) packaging item
38	**MEA**	O	1	3	Package volume
39	**QTY**	R	1	3	Actual quantity per package
	SG14	O	1000	3	List of individual package items
40	**PCI**	M	1	3	Package identification
	SG15	D	1	4	Batch number, production
41	**GIR**	M	1	4	Batch number
42	**DTM**	D	2	5	Manufacturing date / Expiry date
	SG16	R	99	4	Label number(s)
43	**GIN**	M	1	4	Label IDs
	SG12	O	9999	2	Packaging aid
44	**PAC**	M	1	2	Packaging aid
	SG19	R	9999	2	Article identification and despatch quantity
45	**LIN**	M	1	2	Customer's part or article number
46	**PIA**	D	10	3	Additional product id
47	**QTY**	R	1	3	Despatched quantity
48	**QTY**	D	1	3	Split Quantity per handling unit or group of handling units
49	**ALI**	R	1	3	Country of origin, duty regime and nature of transaction
	SG20	R	1	3	Shipment / Delivery note reference
50	**RFF**	M	1	3	Shipment / Delivery note reference
51	**DTM**	O	1	4	Delivery note date
	SG20	R	1	3	Order reference
52	**RFF**	M	1	3	Order reference
	SG22	O	1	3	Internal place of destination
53	**LOC**	M	1	3	Point of use
54	**UNT**	M	1	0	Message trailer
55	**UNZ**	M	1	0	Interchange trailer

No = Consecutive segment number, MaxOcc = Maximum occurrence of the segment/group
St = Status, EDIFACT: M=Mandatory, C=Conditional
User specific: R=Required, O=Optional, D=Dependent, A=Advised, N=Not used

Branching Diagram of Used Segments/Groups

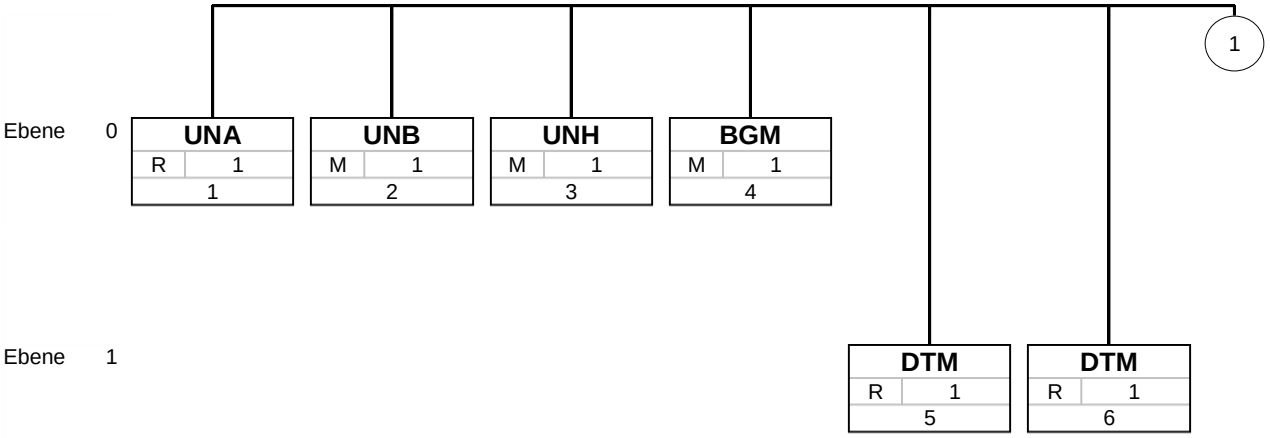

Tag	
St	MaxWdh
No	

Tag = Segment/Group Tag
St = Status (M=Mandatory, C=Conditional, R=Required, O=Optional, A=Advised, D=Dependent)
MaxOcc = Maximum occurrence of the segment/group
No = Consecutive segment number

Branching Diagram of Used Segments/Groups

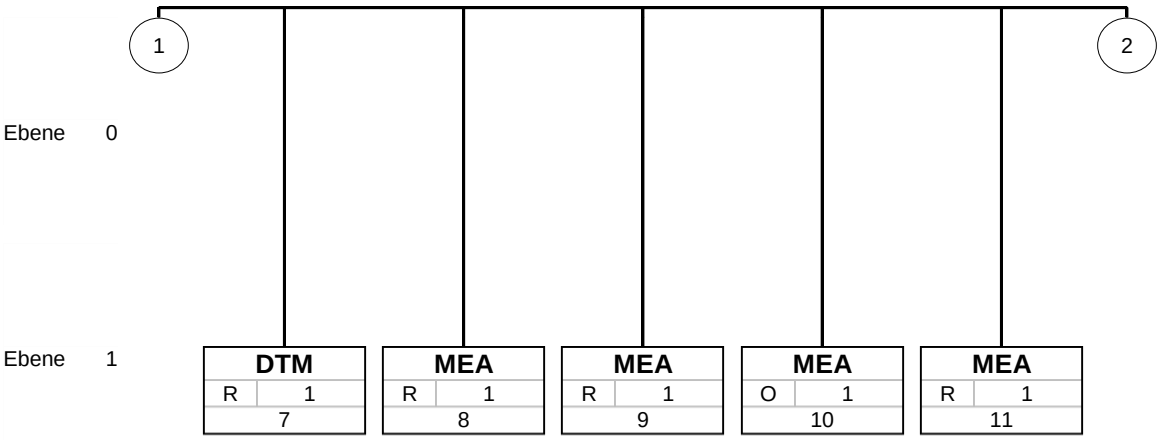

Tag	
St	MaxWdh
No	

Tag = Segment/Group Tag
St = Status (M=Mandatory, C=Conditional, R=Required, O=Optional, A=Advised, D=Dependent)
MaxOcc = Maximum occurrence of the segment/group
No = Consecutive segment number

Branching Diagram of Used Segments/Groups

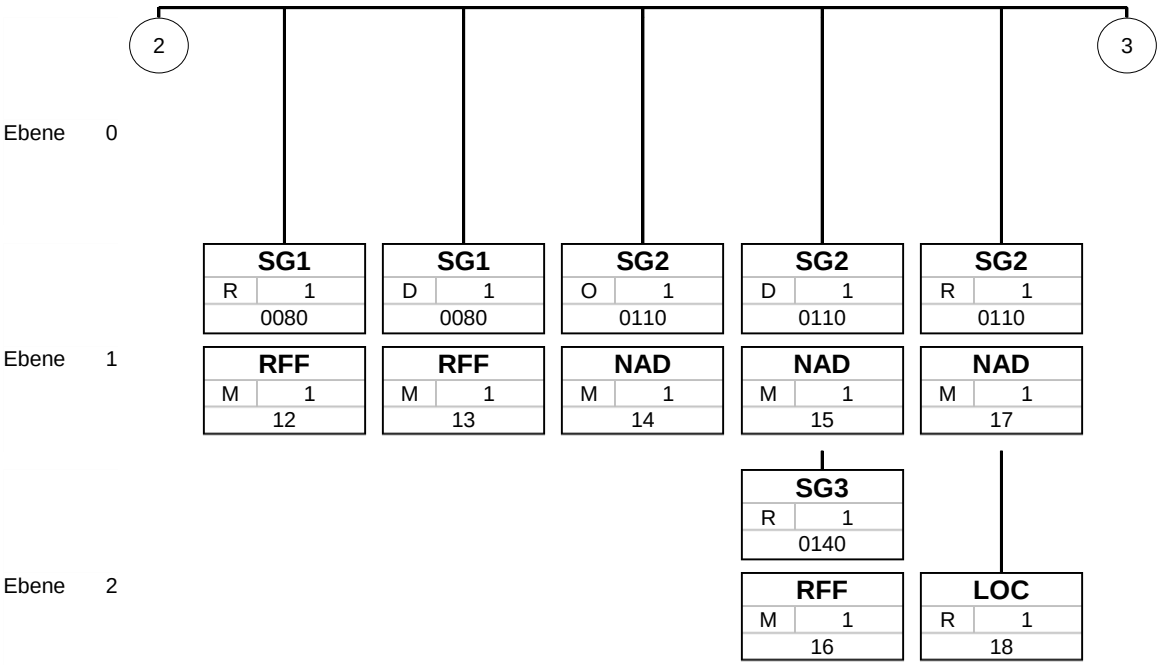

Tag	
St	MaxWdh
No	

Tag = Segment/Group Tag
St = Status (M=Mandatory, C=Conditional, R=Required, O=Optional, A=Advised, D=Dependent)
MaxOcc = Maximum occurrence of the segment/group
No = Consecutive segment number

Branching Diagram of Used Segments/Groups

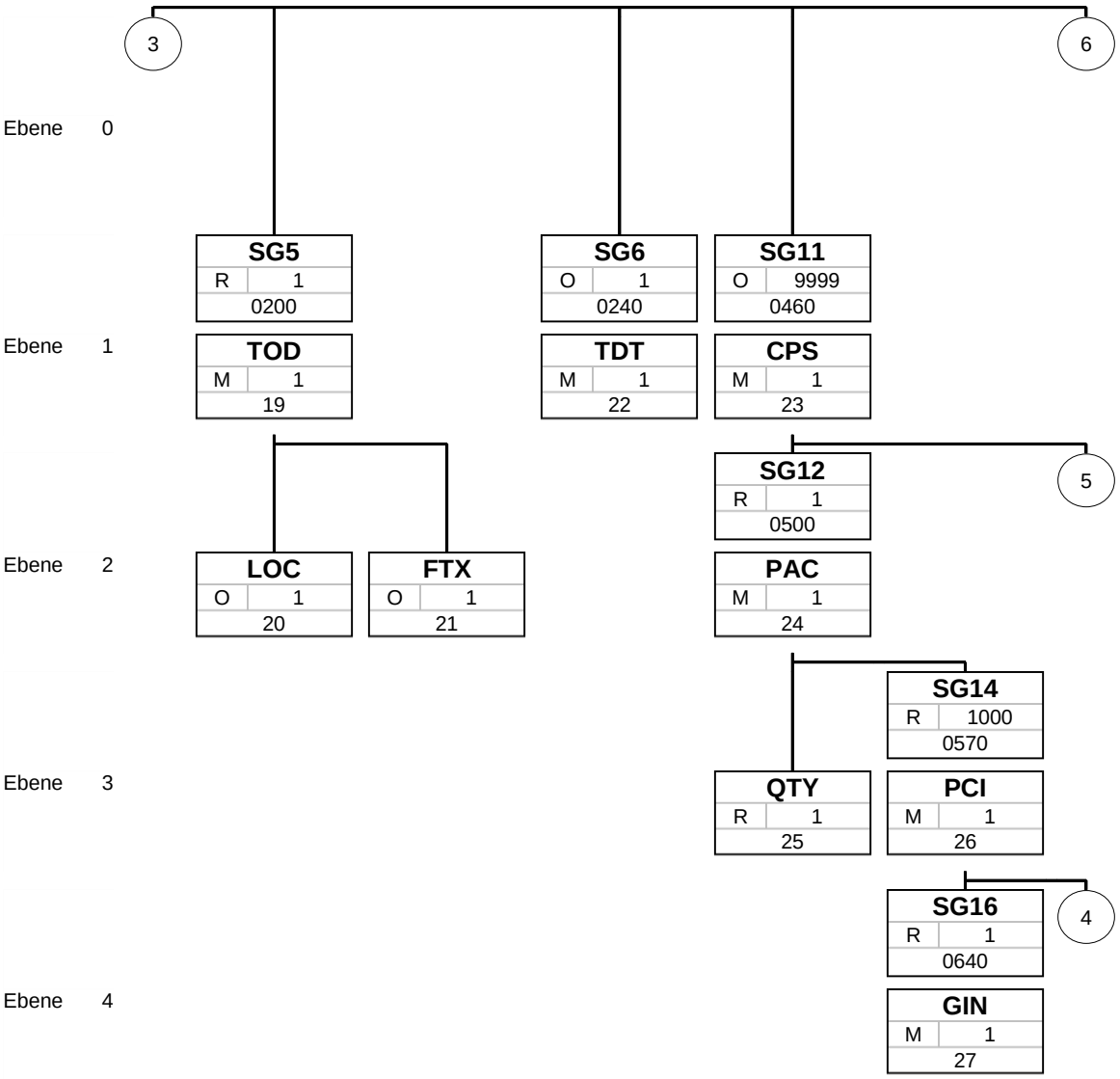

Tag	
St	MaxWdh
No	

Tag = Segment/Group Tag
St = Status (M=Mandatory, C=Conditional, R=Required, O=Optional, A=Advised, D=Dependent)
MaxOcc = Maximum occurrence of the segment/group
No = Consecutive segment number

Branching Diagram of Used Segments/Groups

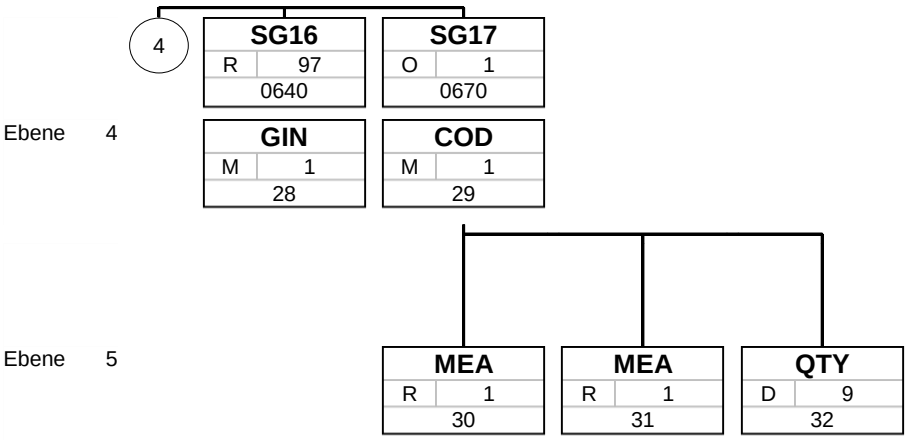

Tag	
St	MaxWdh
No	

Tag = Segment/Group Tag
St = Status (M=Mandatory, C=Conditional, R=Required, O=Optional, A=Advised, D=Dependent)
MaxOcc = Maximum occurrence of the segment/group
No = Consecutive segment number

Branching Diagram of Used Segments/Groups

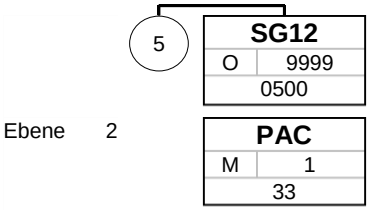

Tag	
St	MaxWdh
No	

Tag = Segment/Group Tag
St = Status (M=Mandatory, C=Conditional, R=Required, O=Optional, A=Advised, D=Dependent)
MaxOcc = Maximum occurrence of the segment/group
No = Consecutive segment number

Branching Diagram of Used Segments/Groups

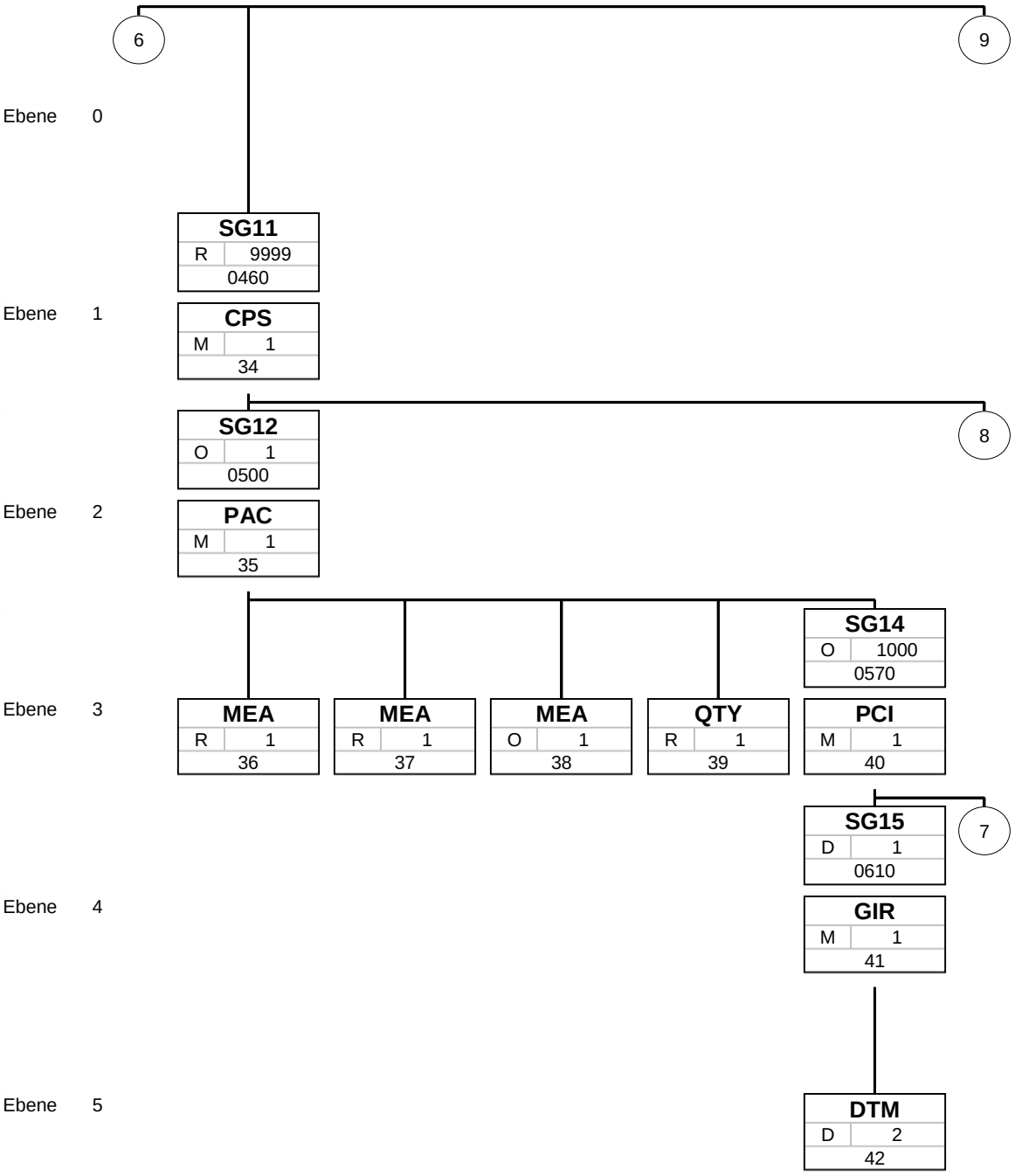

Tag	
St	MaxWdh
No	

Tag = Segment/Group Tag
St = Status (M=Mandatory, C=Conditional, R=Required, O=Optional, A=Advised, D=Dependent)
MaxOcc = Maximum occurrence of the segment/group
No = Consecutive segment number

Branching Diagram of Used Segments/Groups

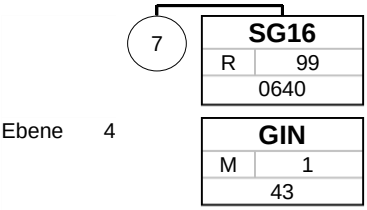

Tag	
St	MaxWdh
No	

Tag = Segment/Group Tag
St = Status (M=Mandatory, C=Conditional, R=Required, O=Optional, A=Advised, D=Dependent)
MaxOcc = Maximum occurrence of the segment/group
No = Consecutive segment number

Branching Diagram of Used Segments/Groups

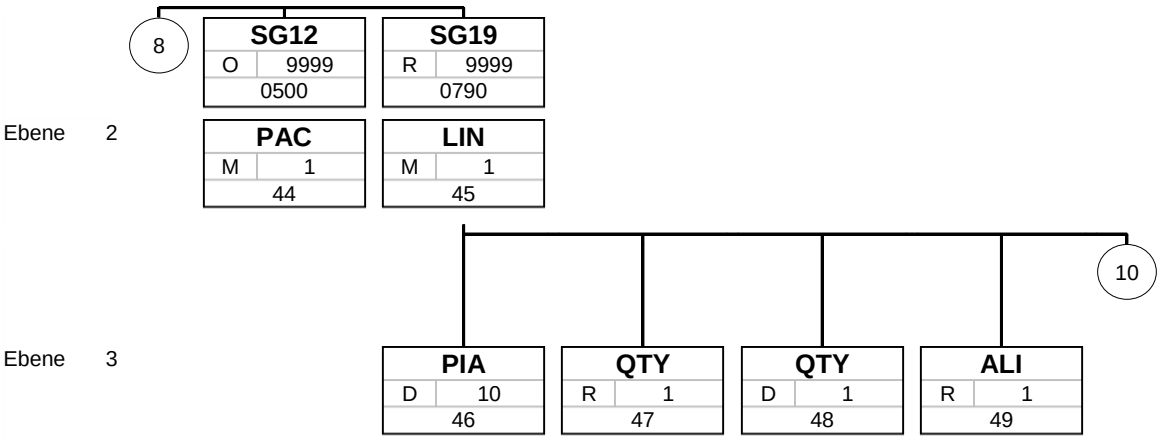

Tag	
St	MaxWdh
No	

Tag = Segment/Group Tag
St = Status (M=Mandatory, C=Conditional, R=Required, O=Optional, A=Advised, D=Dependent)
MaxOcc = Maximum occurrence of the segment/group
No = Consecutive segment number

Branching Diagram of Used Segments/Groups

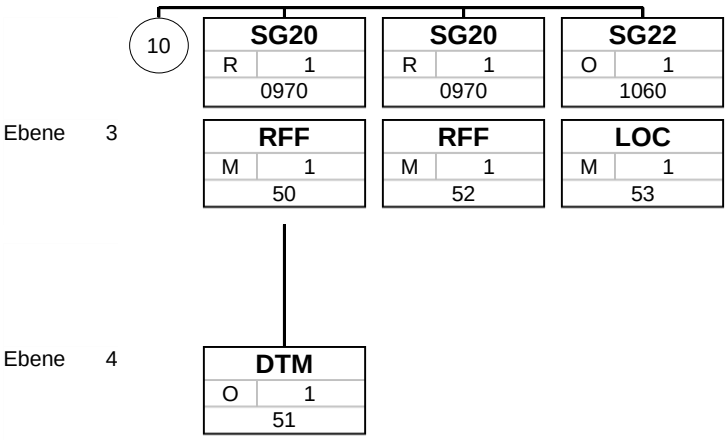

Tag	
St	MaxWdh
No	

Tag = Segment/Group Tag
St = Status (M=Mandatory, C=Conditional, R=Required, O=Optional, A=Advised, D=Dependent)
MaxOcc = Maximum occurrence of the segment/group
No = Consecutive segment number

Branching Diagram of Used Segments/Groups

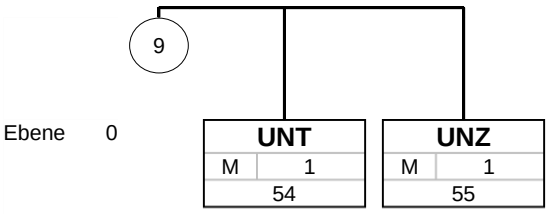

Tag	
St	MaxWdh
No	

Tag = Segment/Group Tag
St = Status (M=Mandatory, C=Conditional, R=Required, O=Optional, A=Advised, D=Dependent)
MaxOcc = Maximum occurrence of the segment/group
No = Consecutive segment number

Segments

No	Tag	St	MaxOcc	Level	Name
1	**UNA**	R	1	0	**Service string advice**

		Standard		Implementation		
Tag	Name	St	Format	St	Format	Usage / Remark
UNA						
UNA1	Component data element separator	M	an1	M	an1	Colon
UNA2	Data element separator	M	an1	M	an1	Plus sign
UNA3	Decimal notation	M	an1	M	an1	Decimal point or comma This differs from version 4 that only allows decimal point.
UNA4	Release indicator	M	an1	M	an1	Question mark
UNA5	Reserved for future use	M	an1	M	an1	Blank
UNA6	Segment terminator	M	an1	M	an1	Apostrophe

Remark:
The use of UNA is strongly recommended and UNA5 must be blank.

Example:
```
UNA:+.? '
```

No = Consecutive segment number
MaxOcc = Maximum occurrence of the segment/group
St = Status, EDIFACT: M=Mandatory, C=Conditional
User specific: R=Required, O=Optional, D=Dependent, A=Advised, N=Not used

Segments

No	Tag	St	MaxOcc	Level	Name
2	**UNB**	M	1	0	**Interchange header**

		Standard		Implementation		
Tag	Name	St	Format	St	Format	Usage / Remark
UNB						
S001	Syntax identifier	M		M		
0001	Syntax identifier	M	a4	M	a4	**UNOC UN/ECE level C**
0002	Syntax version number	M	an1	M	an1	**X Syntax version 4 ISO 9735-11 profile.** To use syntax version 4 according to the ISO 9735-11 profile, code "X" must be used here.
0080	Service code list directory version number	C	an..6	N		Not used
0133	Character encoding, coded	C	an..3	N		Not used
0076	Syntax release number	C	an2	N		Not used
S002	Interchange sender	M		M		
0004	Sender identification	M	an..35	M	an..35	Unique ID of the sender in the data transmission network or system used.
0007	Partner identification code qualifier	C	an..4	N		Not used
0008	Address for reverse routing	C	an..14	N		Not used
0042	Interchange sender internal sub-identification	C	an..35	N		Not used
S003	Interchange recipient	M		M		
0010	Recipient identification	M	an..35	M	an..35	Unique ID of the recipient in the data transmission network or system used.
0007	Partner identification code qualifier	C	an..4	N		Not used
0014	Routing address	C	an..14	N		Not used
0046	Interchange recipient internal sub-identification	C	an..35	N		Not used
S004	Date/time of preparation	M		M		
0017	Date of preparation	M	n8	M	n8	Attention: Difference to S3, 8 digits (including century)! Format CCYYMMDD
0019	Time of preparation	M	n4	M	n4	Format hhmm
0020	Interchange control reference	M	an..14	M	an..14	Unique ID of a data transmission.
S005	Recipient's reference, password	C		N		
0022	Recipient's reference/password	M	an..14	N		Not used
0025	Recipient's reference/password qualifier	C	an2	N		Not used
0026	Application reference	C	an..14	N		Not used
0029	Processing priority code	C	a1	N		Not used
0031	Acknowledgement request	C	n1	N		Not used
0032	Communications agreement ID	C	an..35	N		Not used
0035	Test indicator	C	n1	N		Not used

Remark:

Example:

```
UNB+UNOC:X+012345678+O0013000428BROSE+20230306:0719+2022000025'
```

No = Consecutive segment number
MaxOcc = Maximum occurrence of the segment/group
St = Status, EDIFACT: M=Mandatory, C=Conditional
User specific: R=Required, O=Optional, D=Dependent, A=Advised, N=Not used

Segments

No	Tag	St	MaxOcc	Level	Name
3	**UNH**	M	1	0	**Message header**

		Standard		Implementation		
Tag	Name	St	Format	St	Format	Usage / Remark
UNH						
0062	Message reference number	M	an..14	M	an..14	Message reference number (in the interchange)
S009	Message identifier	M		M		
0065	Message type	M	an..6	M	an..6	**DESADV Despatch advice message**
0052	Message version number	M	an..3	M	an..3	**D Draft version/UN/EDIFACT Directory**
0054	Message release number	M	an..3	M	an..3	**20B Release 2020 - B**
0051	Controlling agency	M	an..2	M	an..2	**UN UN/CEFACT**
0057	Association assigned code	C	an..6	O	an..6	Identification of the subset release, assigned by VDA. **GAVF30 VDA DESADV Version 3.0**
0110	Code list directory version number	C	an..6	N		Not used
0113	Message type sub-function identification	C	an..6	N		Not used
0068	Common access reference	C	an..35	N		Not used
S010	Status of the transfer	C		N		
0070	Sequence of transfers	M	n..2	N		Not used
0073	First and last transfer	C	a1	N		Not used
S016	Message subset identification	C		N		
0115	Message subset identification	M	an..14	N		Not used
0116	Message subset version number	C	an..3	N		Not used
0118	Message subset release number	C	an..3	N		Not used
0051	Controlling agency	C	an..2	N		Not used
S017	Message implementation guideline identification	C		N		
0121	Message implementation guideline identification	M	an..14	N		Not used
0122	Message implementation guideline version number	C	an..3	N		Not used
0124	Message implementation guideline release number	C	an..3	N		Not used
0051	Controlling agency	C	an..2	N		Not used
S018	Scenario identification	C		N		
0127	Scenario identification	M	an..14	N		Not used
0128	Scenario version number	C	an..3	N		Not used
0130	Scenario release number	C	an..3	N		Not used
0051	Controlling agency	C	an..2	N		Not used

Remark:

Example:

```
UNH+1+DESADV:D:20B:UN:GAVF30'
```

No = Consecutive segment number
MaxOcc = Maximum occurrence of the segment/group
St = Status, EDIFACT: M=Mandatory, C=Conditional
User specific: R=Required, O=Optional, D=Dependent, A=Advised, N=Not used

Segments

No	Tag	St	MaxOcc	Level	Name
4	**BGM**	M	1	0	**Beginning of message**

		Standard		Implementation		
Tag	Name	St	Format	St	Format	Usage / Remark
BGM						
C002	Document/message name	C		R		
1001	Document name code	C	an..3	R	an..3	**351 Despatch advice**
1131	Code list identification code	C	an..17	N		Not used
3055	Code list responsible agency code	C	an..3	N		Not used
1000	Document name	C	an..35	N		Not used
C106	Document/message identification	C		R		
1004	Document identifier	C	an..70	R	an..35	Despatch advice number Unique identifier of DESADV. No duplicates during calendar year.
1056	Version identifier	C	an..9	N		Not used
1060	Revision identifier	C	an..6	N		Not used
1225	Message function code	C	an..3	O	an..3	**9 Original**
4343	Response type code	C	an..3	N		Not used
1373	Document status code	C	an..3	N		Not used
3453	Language name code	C	an..3	N		Not used

Remark:
The document ID (DE 1004) is also referred to as the despatch advice number. In contrast to the despatch advice, the shipping documents sent together with the goods are referred to as delivery notes.

Relationship between shipment, DESADV and delivery note:
A shipment is always represented by one DESADV; a DESADV contains all the details of one single shipment.
In standard processes (not JIS), all items of the shipment can be listed in one delivery note.
Ideal situation: shipment = DESADV = delivery note (1:1:1)
Also possible: shipment = DESADV = multiple delivery notes (1:1:n)
The delivery note number must be entered at item level. VDA 4913 includes an additional "delivery note" level.
Most invoicing systems use the delivery note (and not the DESADV) as the reference document,
so that it is not possible to do away with delivery notes and only use DESADVs (despatch advices).

Example:
```
BGM+351+0003379779+9'
```

No = Consecutive segment number
MaxOcc = Maximum occurrence of the segment/group
St = Status, EDIFACT: M=Mandatory, C=Conditional
User specific: R=Required, O=Optional, D=Dependent, A=Advised, N=Not used

Segments

No	Tag	St	MaxOcc	Level	Name
5	**DTM**	R	1	1	**Despatch advice date**

		Standard		Implementation		
Tag	Name	St	Format	St	Format	Usage / Remark
DTM						
C507	Date/time/period	M		M		
2005	Date or time or period function code qualifier	M	an..3	M	an..3	**137 Document issue date time**
2380	Date or time or period text	C	an..35	R	n..12	Date/time of creation of DESADV
2379	Date or time or period format code	C	an..3	R	an..3	**102 CCYYMMDD** **203 CCYYMMDDHHMM**

Remark:

Example:

```
DTM+137:202304040636:203'
```

No = Consecutive segment number
MaxOcc = Maximum occurrence of the segment/group
St = Status, EDIFACT: M=Mandatory, C=Conditional
User specific: R=Required, O=Optional, D=Dependent, A=Advised, N=Not used

Segments

No	Tag	St	MaxOcc	Level	Name
6	**DTM**	R	1	1	**Despatch date**

		Standard		Implementation		
Tag	Name	St	Format	St	Format	Usage / Remark
DTM						
C507	Date/time/period	M		M		
2005	Date or time or period function code qualifier	M	an..3	M	an..3	**11 Despatch date and or time**
2380	Date or time or period text	C	an..35	R	an..12	**Despatch date** Date/time of despatch of goods
2379	Date or time or period format code	C	an..3	R	an..3	**102 CCYYMMDD** **203 CCYYMMDDHHMM**

Remark:

Example:

```
DTM+11:202304040636:203'
```

No = Consecutive segment number
MaxOcc = Maximum occurrence of the segment/group
St = Status, EDIFACT: M=Mandatory, C=Conditional
User specific: R=Required, O=Optional, D=Dependent, A=Advised, N=Not used

Segments

No	Tag	St	MaxOcc	Level	Name
7	**DTM**	R	1	1	**Estimated arrival date**

		Standard		Implementation		
Tag	Name	St	Format	St	Format	Usage / Remark
DTM						
C507	Date/time/period	M		M		
2005	Date or time or period function code qualifier	M	an..3	M	an..3	**132 Transport means arrival date time, estimated**
2380	Date or time or period text	C	an..35	R	n..12	The expected arrival date of the shipment at the unloading point defined by Brose, estimated by the sender.
2379	Date or time or period format code	C	an..3	R	an..3	**102 CCYYMMDD** **203 CCYYMMDDHHMM**

Remark:
The arrival date/time at ship-to's premises as calculated by the supplier

Example:
```
DTM+132:202304181000:203'
```

No = Consecutive segment number
MaxOcc = Maximum occurrence of the segment/group
St = Status, EDIFACT: M=Mandatory, C=Conditional
User specific: R=Required, O=Optional, D=Dependent, A=Advised, N=Not used

Segments

No	Tag	St	MaxOcc	Level	Name
8	**MEA**	R	1	1	**Consignment's gross weight**

		Standard		Implementation		
Tag	Name	St	Format	St	Format	Usage / Remark
MEA						
6311	Measurement purpose code qualifier	M	an..3	M	an..3	**AAX Consignment measurement**
C502	Measurement details	C		R		
6313	Measured attribute code	C	an..3	R	an..3	**AAD Consignment gross weight**
6321	Measurement significance code	C	an..3	N		Not used
6155	Non-discrete measurement name code	C	an..17	N		Not used
6154	Non-discrete measurement name	C	an..70	N		Not used
C174	Value/range	C		R		
6411	Measurement unit code	C	an..8	R	an..8	**KGM Kilogramm**
6314	Measure	C	an..18	R	n..12	Gross weight - weight (mass) without carrier's equipment
6162	Range minimum quantity	C	n..18	N		Not used
6152	Range maximum quantity	C	n..18	N		Not used
6432	Significant digits quantity	C	n..2	N		Not used
7383	Surface or layer code	C	an..3	N		Not used

Remark:

Example:

```
MEA+AAX+AAD+KGM:447'
```

No = Consecutive segment number
MaxOcc = Maximum occurrence of the segment/group
St = Status, EDIFACT: M=Mandatory, C=Conditional
User specific: R=Required, O=Optional, D=Dependent, A=Advised, N=Not used

Segments

No	Tag	St	MaxOcc	Level	Name
9	**MEA**	R	1	1	**Consignment's net weight**

		Standard		Implementation		
Tag	Name	St	Format	St	Format	Usage / Remark
MEA						
6311	Measurement purpose code qualifier	M	an..3	M	an..3	**AAX Consignment measurement**
C502	Measurement details	C		R		
6313	Measured attribute code	C	an..3	R	an..3	**AAL Net weight**
6321	Measurement significance code	C	an..3	N		Not used
6155	Non-discrete measurement name code	C	an..17	N		Not used
6154	Non-discrete measurement name	C	an..70	N		Not used
C174	Value/range	C		R		
6411	Measurement unit code	C	an..8	R	an..8	**KGM Kilogramm**
6314	Measure	C	an..18	R	n..12	Weight (mass) of the goods
6162	Range minimum quantity	C	n..18	N		Not used
6152	Range maximum quantity	C	n..18	N		Not used
6432	Significant digits quantity	C	n..2	N		Not used
7383	Surface or layer code	C	an..3	N		Not used

Remark:
Net weight: weight (mass) of goods including retail packaging
The maximum number of MEA segments in header of a DESADV shall not exceed 5.

Example:
```
MEA+AAX+AAL+KGM:437'
```

No = Consecutive segment number
MaxOcc = Maximum occurrence of the segment/group
St = Status, EDIFACT: M=Mandatory, C=Conditional
User specific: R=Required, O=Optional, D=Dependent, A=Advised, N=Not used

Segments

No	Tag	St	MaxOcc	Level	Name
10	**MEA**	O	1	1	**Consignment volume (Total cube)**

		Standard		Implementation		
Tag	Name	St	Format	St	Format	Usage / Remark
MEA						
6311	Measurement purpose code qualifier	M	an..3	M	an..3	**AAX Consignment measurement**
C502	Measurement details	C		R		
6313	Measured attribute code	C	an..3	R	an..3	**ABJ Volume**
6321	Measurement significance code	C	an..3	N		Not used
6155	Non-discrete measurement name code	C	an..17	N		Not used
6154	Non-discrete measurement name	C	an..70	N		Not used
C174	Value/range	C		R		
6411	Measurement unit code	C	an..8	R	an..8	**DMQ cubic decimetre** **LTR litre** **MTQ cubic metre**
6314	Measure	C	an..18	R	n..9	Volume
6162	Range minimum quantity	C	n..18	N		Not used
6152	Range maximum quantity	C	n..18	N		Not used
6432	Significant digits quantity	C	n..2	N		Not used
7383	Surface or layer code	C	an..3	N		Not used

Remark:
Volume of the shipment
The maximum number of MEA segments in header of a DESADV shall not exceed 5.

Example:
```
MEA+AAX+ABJ+LTR:980'
```

No = Consecutive segment number
MaxOcc = Maximum occurrence of the segment/group
St = Status, EDIFACT: M=Mandatory, C=Conditional
User specific: R=Required, O=Optional, D=Dependent, A=Advised, N=Not used

Segments

No	Tag	St	MaxOcc	Level	Name
11	**MEA**	R	1	1	**Number of handling units in shipment**

		Standard		Implementation		
Tag	Name	St	Format	St	Format	Usage / Remark
MEA						
6311	Measurement purpose code qualifier	M	an..3	M	an..3	**AAE Measurement**
C502	Measurement details	C		N		
6313	Measured attribute code	C	an..3	N		Not used
6321	Measurement significance code	C	an..3	N		Not used
6155	Non-discrete measurement name code	C	an..17	N		Not used
6154	Non-discrete measurement name	C	an..70	N		Not used
C174	Value/range	C		R		
6411	Measurement unit code	C	an..8	R	an..8	**C62 one** **PCE piece** PCE and C62 are synonymous for piece
6314	Measure	C	an..18	R	n..6	Actual number of handling units in shipment (for definition of handling unit, see VDA process description - VDA-4987-Despatch-Advice-with-EDI) **Number of handling units in shipment**
6162	Range minimum quantity	C	n..18	N		Not used
6152	Range maximum quantity	C	n..18	N		Not used
6432	Significant digits quantity	C	n..2	N		Not used
7383	Surface or layer code	C	an..3	N		Not used

Remark:
The maximum number of MEA segments in header of a DESADV shall not exceed 5.

Example:
```
MEA+AAE++C62:1'
```

No = Consecutive segment number
MaxOcc = Maximum occurrence of the segment/group
St = Status, EDIFACT: M=Mandatory, C=Conditional
User specific: R=Required, O=Optional, D=Dependent, A=Advised, N=Not used

Segments

No	Tag	St	MaxOcc	Level	Name
	SG1	R	1	1	**Shipment number, assigned by supplier**
12	**RFF**	M	1	1	**Shipment number, assigned by supplier**

		Standard		Implementation		
Tag	Name	St	Format	St	Format	Usage / Remark
RFF						
C506	Reference	M		M		
1153	Reference code qualifier	M	an..3	M	an..3	**CRN Transport means journey identifier**
1154	Reference identifier	C	an..70	R	an..35	Unique reference identifier assigned to a delivery / route / departure of transport vehicle. Corresponds to shipment reference number in VDA Recommendation 4913.
1156	Document line identifier	C	an..6	N		Not used
1056	Version identifier	C	an..9	N		Not used
1060	Revision identifier	C	an..6	N		Not used

Remark:

Example:

```
RFF+CRN:3379666'
```

No = Consecutive segment number
MaxOcc = Maximum occurrence of the segment/group
St = Status, EDIFACT: M=Mandatory, C=Conditional
User specific: R=Required, O=Optional, D=Dependent, A=Advised, N=Not used

Segments

No	Tag	St	MaxOcc	Level	Name
	SG1	D	1	1	**Transport ID, assigned by customer**

Only for deliveries registered via BroTAP (Brose Transport Management).
Insert FWO/FU number from BroTAP.

13	**RFF**	M	1	1	**Transport ID, assigned by customer**

		Standard		Implementation		
Tag	Name	St	Format	St	Format	Usage / Remark
RFF						
C506	Reference	M		M		
1153	Reference code qualifier	M	an..3	M	an..3	**AAO Consignment identifier, consignee assigned** AAO = Transport ID, assigned by customer
1154	Reference identifier	C	an..70	R	an..35	**FWO/FU number from BroTAP.**
1156	Document line identifier	C	an..6	N		Not used
1056	Version identifier	C	an..9	N		Not used
1060	Revision identifier	C	an..6	N		Not used

Remark:

Example:

```
RFF+AAO:110324030'
```

No = Consecutive segment number
MaxOcc = Maximum occurrence of the segment/group
St = Status, EDIFACT: M=Mandatory, C=Conditional
User specific: R=Required, O=Optional, D=Dependent, A=Advised, N=Not used

Segments

No	Tag	St	MaxOcc	Level	Name
	SG2	O	1	1	**Buyer**
14	**NAD**	M	1	1	**Buyer's name and address**

		Standard		Implementation		
Tag	Name	St	Format	St	Format	Usage / Remark
NAD						
3035	Party function code qualifier	M	an..3	M	an..3	**BY Buyer**
C082	Party identification details	C		R		
3039	Party identifier	M	an..35	M	an..35	Unique identifier of business partner - customer number or plant code from DELFOR - NAD+BY
1131	Code list identification code	C	an..17	N		Not used
3055	Code list responsible agency code	C	an..3	R	an..3	Code specifying the agency responsible for a code list. **91 Assigned by seller or seller's agent** **92 Assigned by buyer or buyer's agent**
C058	Name and address	C		N		
3124	Name and address description	M	an..35	N		Not used
3124	Name and address description	C	an..35	N		Not used
3124	Name and address description	C	an..35	N		Not used
3124	Name and address description	C	an..35	N		Not used
3124	Name and address description	C	an..35	N		Not used
C080	Party name	C		O		
3036	Party name	M	an..70	M	an..35	Single text line for specification of a name
3036	Party name	C	an..70	N		Not used
3036	Party name	C	an..70	N		Not used
3036	Party name	C	an..70	N		Not used
3036	Party name	C	an..70	N		Not used
3045	Party name format code	C	an..3	N		Not used
C059	Street	C		O		
3042	Street and number or post office box identifier	M	an..256	M	an..35	Part of address identifying the location of a building, normally given together with street
3042	Street and number or post office box identifier	C	an..256	O	an..256	
3042	Street and number or post office box identifier	C	an..256	N		Not used
3042	Street and number or post office box identifier	C	an..256	N		Not used
3164	City name	C	an..35	O	an..35	The name of the city, town, or village of this address.
C819	Country subdivision details	C		O		
3229	Country subdivision identifier	C	an..9	R	an..9	State or region within a country. The use of UN LoCodes is recommended.
1131	Code list identification code	C	an..17	N		Not used
3055	Code list responsible agency code	C	an..3	N		Not used
3228	Country subdivision name	C	an..70	N		Not used
3251	Postal identification code	C	an..17	O	an..17	Identifier of one or more address data properties according to the postal service of the respective country
3207	Country identifier	C	an..3	O	an..3	Provides the country part of an address using a code. Use ISO3166 two alpha code.

Remark:

Example:

```
NAD+BY+04547::91++Brose México, S.A. de C.V.+Calle 2 No. 7, Fracc. Ind. Benito J+Querétaro, México
++76120+MX'
```

No = Consecutive segment number
MaxOcc = Maximum occurrence of the segment/group
St = Status, EDIFACT: M=Mandatory, C=Conditional
User specific: R=Required, O=Optional, D=Dependent, A=Advised, N=Not used

Segments

No	Tag	St	MaxOcc	Level	Name
	SG2	D	1	1	**Seller / Supplier**
15	**NAD**	M	1	1	**Seller's name and address**

		Standard		Implementation		
Tag	Name	St	Format	St	Format	Usage / Remark
NAD						
3035	Party function code qualifier	M	an..3	M	an..3	**SE Seller**
C082	Party identification details	C		R		
3039	Party identifier	M	an..35	M	an..35	Unique identifier of business partner - supplier number from DELFOR - NAD+SE
1131	Code list identification code	C	an..17	N		Not used
3055	Code list responsible agency code	C	an..3	R	an..3	**92 Assigned by buyer or buyer's agent** Code specifying the agency responsible for a code list.
C058	Name and address	C		N		
3124	Name and address description	M	an..35	N		Not used
3124	Name and address description	C	an..35	N		Not used
3124	Name and address description	C	an..35	N		Not used
3124	Name and address description	C	an..35	N		Not used
3124	Name and address description	C	an..35	N		Not used
C080	Party name	C		O		
3036	Party name	M	an..70	M	an..35	Single text line for specification of a name
3036	Party name	C	an..70	O	an..70	
3036	Party name	C	an..70	N		Not used
3036	Party name	C	an..70	N		Not used
3036	Party name	C	an..70	N		Not used
3045	Party name format code	C	an..3	N		Not used
C059	Street	C		O		
3042	Street and number or post office box identifier	M	an..256	M	an..35	Part of address identifying the location of a building, normally given together with street.
3042	Street and number or post office box identifier	C	an..256	N		Not used
3042	Street and number or post office box identifier	C	an..256	N		Not used
3042	Street and number or post office box identifier	C	an..256	N		Not used
3164	City name	C	an..35	O	an..35	The name of the city, town, or village of this address.
C819	Country subdivision details	C		O		
3229	Country subdivision identifier	C	an..9	R	an..9	State or region within a country. The use of UN LoCodes is recommended.
1131	Code list identification code	C	an..17	N		Not used
3055	Code list responsible agency code	C	an..3	N		Not used
3228	Country subdivision name	C	an..70	N		Not used
3251	Postal identification code	C	an..17	O	an..17	Identifier of one or more address data properties according to the postal service of the respective country
3207	Country identifier	C	an..3	O	a2	Provides the country part of an address using a code. Use ISO3166 two alpha code.

Remark:
In EDL processes, in which the service provider arranges goods from several suppliers into one shipment and notifies them with one DESADV, the suppliers must be specified in SG19 at item level; this segment group in the header may not then be used. Such processes are identified in BGM, DE 1000.

Example:
```
NAD+SE+0000001234::92++Lieferant Muster:CO.KG+Musterstr. 20-30+Musterstadt++51399+DE'
```

No = Consecutive segment number
MaxOcc = Maximum occurrence of the segment/group
St = Status, EDIFACT: M=Mandatory, C=Conditional
User specific: R=Required, O=Optional, D=Dependent, A=Advised, N=Not used

Segments

No	Tag	St	MaxOcc	Level	Name
	SG2	D	1	1	**Seller / Supplier**
	SG3	R	1	2	**Additional Party ID (DUNS)**
16	**RFF**	M	1	2	**Reference**

		Standard		Implementation		
Tag	Name	St	Format	St	Format	Usage / Remark
RFF						
C506	Reference	M		M		
1153	Reference code qualifier	M	an..3	M	an..3	**ANK Reference number assigned by third party**
1154	Reference identifier	C	an..70	R	n9	DUNS number
1156	Document line identifier	C	an..6	N		Not used
1056	Version identifier	C	an..9	N		Not used
1060	Revision identifier	C	an..6	N		Not used

Remark:
This segment can be used to transmit the DUNS number of the business partner, in addition to the customer number or the supplier number.

Example:
```
RFF+ANK:315735852'
```

No = Consecutive segment number
MaxOcc = Maximum occurrence of the segment/group
St = Status, EDIFACT: M=Mandatory, C=Conditional
User specific: R=Required, O=Optional, D=Dependent, A=Advised, N=Not used

Segments

No	Tag	St	MaxOcc	Level	Name
	SG2	R	1	1	**Ship to**
17	**NAD**	M	1	1	**Ship to's name and address**

		Standard		Implementation		
Tag	Name	St	Format	St	Format	Usage / Remark
NAD						
3035	Party function code qualifier	M	an..3	M	an..3	**ST Ship to**
C082	Party identification details	C		R		
3039	Party identifier	M	an..35	R	an..20	Unique identifier of business partner - customer plant code. Plant code from DELFOR - NAD+ST
1131	Code list identification code	C	an..17	N		Not used
3055	Code list responsible agency code	C	an..3	R	an..3	**92 Assigned by buyer or buyer's agent** Code specifying the agency responsible for a code list.
C058	Name and address	C		N		
3124	Name and address description	M	an..35	N		Not used
3124	Name and address description	C	an..35	N		Not used
3124	Name and address description	C	an..35	N		Not used
3124	Name and address description	C	an..35	N		Not used
3124	Name and address description	C	an..35	N		Not used
C080	Party name	C		O		
3036	Party name	M	an..70	M	an..35	Single text line for specification of a name
3036	Party name	C	an..70	O	an..70	see 3036#1
3036	Party name	C	an..70	O	an..70	see 3036#1
3036	Party name	C	an..70	N		Not used
3036	Party name	C	an..70	N		Not used
3045	Party name format code	C	an..3	N		Not used
C059	Street	C		O		
3042	Street and number or post office box identifier	M	an..256	M	an..35	Part of address identifying the location of a building, normally given together with street
3042	Street and number or post office box identifier	C	an..256	O	an..35	see 3042#1
3042	Street and number or post office box identifier	C	an..256	N		Not used
3042	Street and number or post office box identifier	C	an..256	N		Not used
3164	City name	C	an..35	O	an..35	The name of the city, town, or village of this address.
C819	Country subdivision details	C		O		
3229	Country subdivision identifier	C	an..9	R	an..9	State or region within a country. The use of UN LoCodes is recommended.
1131	Code list identification code	C	an..17	N		Not used
3055	Code list responsible agency code	C	an..3	N		Not used
3228	Country subdivision name	C	an..70	N		Not used
3251	Postal identification code	C	an..17	O	an..17	Identifier of one or more address data properties according to the postal service of the respective country
3207	Country identifier	C	an..3	O	a2	Provides the country part of an address using a code. Use ISO3166 two alpha code. The codes of this codelist are documented in a separate document

Remark:

Example:

```
NAD+ST+1025::92++Rauh Spedition & Logistik GmbH+Hans Rauh Straße 1+Großheirath++96269+DE'
```

No = Consecutive segment number
MaxOcc = Maximum occurrence of the segment/group
St = Status, EDIFACT: M=Mandatory, C=Conditional
User specific: R=Required, O=Optional, D=Dependent, A=Advised, N=Not used

Segments

No	Tag	St	MaxOcc	Level	Name
	SG2	R	1	1	**Ship to**
18	**LOC**	R	1	2	**Place of discharge**

		Standard		Implementation		
Tag	Name	St	Format	St	Format	Usage / Remark
LOC						
3227	Location function code qualifier	M	an..3	M	an..3	**11 Place of discharge**
C517	Location identification	C		R		
3225	Location identifier	C	an..35	O	an..17	Identifier of location, site, etc. - unloading point
1131	Code list identification code	C	an..17	N		Not used
3055	Code list responsible agency code	C	an..3	O	an..3	Code specifying the agency responsible for a code list. **92 Assigned by buyer or buyer's agent**
3224	Location name	C	an..256	N		Not used
C519	Related location one identification	C		N		
3223	First related location identifier	C	an..35	N		Not used
1131	Code list identification code	C	an..17	N		Not used
3055	Code list responsible agency code	C	an..3	N		Not used
3222	First related location name	C	an..70	N		Not used
C553	Related location two identification	C		N		
3233	Second related location identifier	C	an..35	N		Not used
1131	Code list identification code	C	an..17	N		Not used
3055	Code list responsible agency code	C	an..3	N		Not used
3232	Second related location name	C	an..70	N		Not used
5479	Relation code	C	an..3	N		Not used

Remark:
Location where goods are unloaded from transport vehicle.

Example:
```
LOC+11+RAUKC::92'
```

No = Consecutive segment number
MaxOcc = Maximum occurrence of the segment/group
St = Status, EDIFACT: M=Mandatory, C=Conditional
User specific: R=Required, O=Optional, D=Dependent, A=Advised, N=Not used

Segments

No	Tag	St	MaxOcc	Level	Name
	SG5	R	1	1	**Terms of delivery**
19	**TOD**	M	1	1	**Terms of delivery or transport**

		Standard		Implementation		
Tag	Name	St	Format	St	Format	Usage / Remark
TOD						
4055	Delivery or transport terms function code	C	an..3	R	an..3	**6 Delivery condition**
4215	Transport charges payment method code	C	an..3	N		Not used
C100	Terms of delivery or transport	C		R		
4053	Delivery or transport terms description code	C	an..3	O	an..3	Please use the agreed INCOTERM code from the central contract.
1131	Code list identification code	C	an..17	N		Not used
3055	Code list responsible agency code	C	an..3	N		Not used
4052	Delivery or transport terms description	C	an..70	N		Not used
4052	Delivery or transport terms description	C	an..70	N		Not used

Remark:

Example:

```
TOD+6++FCA'
```

No = Consecutive segment number
MaxOcc = Maximum occurrence of the segment/group
St = Status, EDIFACT: M=Mandatory, C=Conditional
User specific: R=Required, O=Optional, D=Dependent, A=Advised, N=Not used

Segments

No	Tag	St	MaxOcc	Level	Name
	SG5	R	1	1	**Terms of delivery**
20	**LOC**	O	1	2	**Incoterms place**

		Standard		Implementation		
Tag	Name	St	Format	St	Format	Usage / Remark
LOC						
3227	Location function code qualifier	M	an..3	M	an..3	**1 Place of terms of delivery**
C517	Location identification	C		R		
3225	Location identifier	C	an..35	N		Not used
1131	Code list identification code	C	an..17	N		Not used
3055	Code list responsible agency code	C	an..3	N		Not used
3224	Location name	C	an..256	O	an..256	Name of place/location, other than city name.
C519	Related location one identification	C		N		
3223	First related location identifier	C	an..35	N		Not used
1131	Code list identification code	C	an..17	N		Not used
3055	Code list responsible agency code	C	an..3	N		Not used
3222	First related location name	C	an..70	N		Not used
C553	Related location two identification	C		N		
3233	Second related location identifier	C	an..35	N		Not used
1131	Code list identification code	C	an..17	N		Not used
3055	Code list responsible agency code	C	an..3	N		Not used
3232	Second related location name	C	an..70	N		Not used
5479	Relation code	C	an..3	N		Not used

Remark:
Identifies location of despatch or destination according to applicable INCOTERMS code.

Example:
```
LOC+1+:::Musterstadt'
```

No = Consecutive segment number
MaxOcc = Maximum occurrence of the segment/group
St = Status, EDIFACT: M=Mandatory, C=Conditional
User specific: R=Required, O=Optional, D=Dependent, A=Advised, N=Not used

Segments

No	Tag	St	MaxOcc	Level	Name
	SG5	R	1	1	**Terms of delivery**
21	**FTX**	O	1	2	**Preference information**

		Standard		Implementation		
Tag	Name	St	Format	St	Format	Usage / Remark
FTX						
4451	Text subject code qualifier	M	an..3	M	an..3	**CUS Customs declaration information**
4453	Free text function code	C	an..3	N		Not used
C107	Text reference	C		N		
4441	Free text description code	M	an..17	N		Not used
1131	Code list identification code	C	an..17	N		Not used
3055	Code list responsible agency code	C	an..3	N		Not used
C108	Text literal	C		R		
4440	Free text	M	an..512	M	an..256	Declaration of preference text according to applicable legal requirements.
4440	Free text	C	an..512	O	an..256	see 4440 # 1
4440	Free text	C	an..512	O	an..256	see 4440 # 1
4440	Free text	C	an..512	O	an..256	see 4440 # 1
4440	Free text	C	an..512	O	an..256	see 4440 # 1
3453	Language name code	C	an..3	O	an..3	Code specifying the language name. Use ISO 639-1988
4447	Free text format code	C	an..3	N		Not used

Remark:
This segment must be used, if partial deliveries or the entire delivery is subject to the customs preference regulations. In this case, the FTX segment contains the text as legally required to declare the preference status. In the ALI segment in DE 9213 at item level, an indicator must be set to 'Y' (yes) to indicate that the preference applies to the respective item. Otherwise, the indicator must be set to 'N' (no).

Example:
```
FTX+CUS+++Text:Text:Text:Text:Text+de'
```

No = Consecutive segment number
MaxOcc = Maximum occurrence of the segment/group
St = Status, EDIFACT: M=Mandatory, C=Conditional
User specific: R=Required, O=Optional, D=Dependent, A=Advised, N=Not used

Segments

No	Tag	St	MaxOcc	Level	Name
	SG6	O	1	1	**Means of transport at departure**
22	**TDT**	M	1	1	**Transport information related to pick-up**

		Standard		Implementation		
Tag	Name	St	Format	St	Format	Usage / Remark
TDT						
8051	Transport stage code qualifier	M	an..3	M	an..3	**12 At departure**
8028	Means of transport journey identifier	C	an..17	N		Unique reference number assigned by the carrier to a certain route or departure of a transport vehicle. Not used
C220	Mode of transport	C		O		
8067	Transport mode name code	C	an..3	O	an..3	**10 Maritime transport** **20 Rail transport** **30 Road transport** **40 Air transport** **50 Mail** **60 Multimodal transport** **70 Fixed transport installations** **80 Inland water transport** Code of mode of transport. Use UN/ECE Recommendation No 19.
8066	Transport mode name	C	an..17	N		Not used
C001	Transport means	C		N		
8179	Transport means description code	C	an..8	N		Not used
1131	Code list identification code	C	an..17	N		Not used
3055	Code list responsible agency code	C	an..3	N		Not used
8178	Transport means description	C	an..17	N		Not used
C040	Carrier	C		N		
3127	Carrier identifier	C	an..17	N		Not used
1131	Code list identification code	C	an..17	N		Not used
3055	Code list responsible agency code	C	an..3	N		Not used
3126	Carrier name	C	an..35	N		Not used
8101	Transit direction indicator code	C	an..3	N		Not used
C401	Excess transportation information	C		N		
8457	Excess transportation reason code	M	an..3	N		Not used
8459	Excess transportation responsibility code	M	an..3	N		Not used
7130	Customer shipment authorisation identifier	C	an..17	N		Not used
C222	Transport identification	C		O		
8213	Transport means identification name identifier	C	an..35	O	an..35	Identifier of a means of transport, like license plate etc.
1131	Code list identification code	C	an..17	N		Not used
3055	Code list responsible agency code	C	an..3	N		Not used
8212	Transport means identification name	C	an..70	N		Not used
8453	Transport means nationality code	C	an..3	N		Not used
8281	Transport means ownership	C	an..3	N		Not used

No = Consecutive segment number
MaxOcc = Maximum occurrence of the segment/group
St = Status, EDIFACT: M=Mandatory, C=Conditional
User specific: R=Required, O=Optional, D=Dependent, A=Advised, N=Not used

Segments

		Standard		Implementation		
Tag	Name	St	Format	St	Format	Usage / Remark
	indicator code					
C003	Power type	C		N		
7041	Power type code	C	an..3	N		Not used
1131	Code list identification code	C	an..17	N		Not used
3055	Code list responsible agency code	C	an..3	N		Not used
7040	Power type description	C	an..17	N		Not used
C290	Transport service	C		N		
8462	Transport service identification code	C	an..17	N		Not used
1131	Code list identification code	C	an..17	N		Not used
3055	Code list responsible agency code	C	an..3	N		Not used
8463	Transport service name	C	an..35	N		Not used
8464	Transport service description	C	an..256	N		Not used

Remark:
Usually the DESADV contains the transport means at pick-up/loading location (collection of goods or shipment by supplier).

Example:
```
TDT+12++30+++++N-AB 443'
```

No = Consecutive segment number
MaxOcc = Maximum occurrence of the segment/group
St = Status, EDIFACT: M=Mandatory, C=Conditional
User specific: R=Required, O=Optional, D=Dependent, A=Advised, N=Not used

Segments

No	Tag	St	MaxOcc	Level	Name
	SG11	O	9999	1	**Despatch control line / List of handling unit groups**
23	**CPS**	M	1	1	**Handling unit / intermediate packaging level**

		Standard		Implementation		
Tag	Name	St	Format	St	Format	Usage / Remark
CPS						
7164	Hierarchical structure level identifier	M	an..35	R	n..6	Incremented counter generated by message sender, assigned to a packaging group in the message. We recommend starting at 1.
7166	Hierarchical structure parent identifier	C	an..35	N		Not used
7075	Packaging level code	C	an..3	R	an..3	**3 Outer** **2 Intermediate** Code specifying a level of packaging.

Remark:
With SG11 identified as handling unit / intermediate packaging level, there is no article item (SG19), as these are always preceded by the inner packaging. The packaging structure must be entered in the message from the outside inwards, i.e. handling unit, followed by packaging units; main packaging followed by packaging aids.

Example:
A shipment consists of 2 pallets and 2 LLCs (large load carriers) with 8 SLC (small load carriers) on each pallet and in each LLC. In this case there are two SG11 for outer packages in the message, one for the pallets and one for the LLC. Within SG11 (trigger CPS) there is one SG 12 for main packages and 1.. n SG 12 for packaging aid belonging to the main package.

These SG11 are then followed by another SG 11 for the inner packages (SLC).

If different packaging materials have the same properties (same packaging type, same packaging aids (number and type), same quantity per package etc.) they can be combined into one packaging group.
See detailed process description - VDA-4987-Shipping notification with EDI. This applies accordingly to simplified loading units. They then form a packaging group (group change level: SG11).

For each outer packaging, the number/identifier of the packaging units at the next level are listed. This applies accordingly to any intermediate packaging units.

Example:
```
CPS+1++3'
```

No = Consecutive segment number
MaxOcc = Maximum occurrence of the segment/group
St = Status, EDIFACT: M=Mandatory, C=Conditional
User specific: R=Required, O=Optional, D=Dependent, A=Advised, N=Not used

Segments

No	Tag	St	MaxOcc	Level	Name
	SG11	O	9999	1	**Despatch control line / List of handling unit groups**
	SG12	R	1	2	**Handling unit group details**
24	**PAC**	M	1	2	**Quantity, type and ownership identifier**

		Standard		Implementation		
Tag	Name	St	Format	St	Format	Usage / Remark
PAC						
7224	Package quantity	C	n..8	R	n..4	Number of identical handling inits belonging to this group.
C531	Packaging details	C		R		
7075	Packaging level code	C	an..3	N		Not used
7233	Packaging related description code	C	an..3	R	an..3	**35 Type of package** Code 35 identifies the main packaging
7073	Packaging terms and conditions code	C	an..3	O	an..3	Currently not used **AAA One way packaging, supplier pays** **AAB One way packaging, customer pays** **AAC Customer's returnable package item** **AAD Supplier's returnable package item** **AAE Service provider's returnable package item**
C202	Package type	C		R		
7065	Package type description code	C	an..17	R	an..17	Code of packaging designation (packaging code of customer).
1131	Code list identification code	C	an..17	N		Not used
3055	Code list responsible agency code	C	an..3	O	an..3	Code specifying the agency responsible for a code list. **92 Assigned by buyer or buyer's agent**
7064	Type of packages	C	an..35	N		Not used
C402	Package type identification	C		O		
7077	Description format code	M	an..3	M	an..3	**X Semi-structured (code + text)**
7064	Type of packages	M	an..35	M	an..35	Designation of packaging (packaging code of supplier). According to EDIFACT, this element is mandatory. If this DE group is to be used and the supplier has not defined internal packaging codes, enter the same value as in DE 7064 for VDA code.
7143	Item type identification code	C	an..3	O	an..3	**SA Supplier's article number**
7064	Type of packages	C	an..35	O	an..35	Designation of packaging, VDA code list (see separate documentation)
7143	Item type identification code	C	an..3	N		Not used
C532	Returnable package details	C		N		
8395	Returnable package freight payment responsibility code	C	an..3	N		Not used
8393	Returnable package load contents code	C	an..3	N		Not used

Remark:
This variant of SG12 is used to describe the type of handling unit or intermediate packaging that corresponds to a specific design, specifying properties such as dimensions, material, etc.

Example:
```
PAC+1+:35:AAC+304413-000::92+X:DB0028:SA:12081A'
```

No = Consecutive segment number
MaxOcc = Maximum occurrence of the segment/group
St = Status, EDIFACT: M=Mandatory, C=Conditional
User specific: R=Required, O=Optional, D=Dependent, A=Advised, N=Not used

Segments

No	Tag	St	MaxOcc	Level	Name
	SG11	O	9999	1	**Despatch control line / List of handling unit groups**
	SG12	R	1	2	**Handling unit group details**
25	**QTY**	R	1	3	**Number of contained inner package items**

		Standard		Implementation		
Tag	Name	St	Format	St	Format	Usage / Remark
QTY						
C186	Quantity details	M		M		
6063	Quantity type code qualifier	M	an..3	M	an..3	**189 Number of packages in handling unit**
6060	Quantity	M	an..35	M	an..35	Number of contained packages
6411	Measurement unit code	C	an..8	R	an..8	**PCE piece** **C62 one**

Remark:
Number of packages (including virtual packages) contained in one loading unit. Only packaging of the next inner level is counted.

Example:
```
QTY+189:24:PCE'
```

No = Consecutive segment number
MaxOcc = Maximum occurrence of the segment/group
St = Status, EDIFACT: M=Mandatory, C=Conditional
User specific: R=Required, O=Optional, D=Dependent, A=Advised, N=Not used

Segments

No	Tag	St	MaxOcc	Level	Name
	SG11	O	9999	1	**Despatch control line / List of handling unit groups**
	SG12	R	1	2	**Handling unit group details**
	SG14	R	1000	3	**List of individual handling units**
26	**PCI**	M	1	3	**Handling unit label type**

		Standard		Implementation		
Tag	Name	St	Format	St	Format	Usage / Remark
PCI						
4233	Marking instructions code	C	an..3	R	an..3	**17 Seller's instructions** Code is placeholder only, as DE 4233 is assigned status "M".
C210	Marks & labels	C		N		
7102	Shipping marks description	M	an..35	N		Additional marks/texts used on master label (e.g. line handling code). Not used
7102	Shipping marks description	C	an..35	N		Not used
7102	Shipping marks description	C	an..35	N		Not used
7102	Shipping marks description	C	an..35	N		Not used
7102	Shipping marks description	C	an..35	N		Not used
7102	Shipping marks description	C	an..35	N		Not used
7102	Shipping marks description	C	an..35	N		Not used
7102	Shipping marks description	C	an..35	N		Not used
7102	Shipping marks description	C	an..35	N		Not used
7102	Shipping marks description	C	an..35	N		Not used
8169	Full or empty indicator code	C	an..3	N		Not used
C827	Type of marking	C		R		
7511	Marking type code	M	an..3	R	an..3	Handling Unit Category **5J Unique license plate number mixed load** **6J Unique license plate number assigned to a master load** First part of transport label. This identifier indicates whether the label is applied to the outer or the inner packaging. For outer packaging labels, a distinction is made between a master label and a mixed load label. 6J corresponds to former code "M" = master label 5J corresponds to former code "G" = master mixed load
1131	Code list identification code	C	an..17	N		Not used
3055	Code list responsible agency code	C	an..3	O	an..3	**5 ISO (International Organization for Standardization)**

Remark:
Each segment group 14 represents exactly one handling unit with its components/properties

Example:
```
PCI+17+++6J::5'
```

No = Consecutive segment number
MaxOcc = Maximum occurrence of the segment/group
St = Status, EDIFACT: M=Mandatory, C=Conditional
User specific: R=Required, O=Optional, D=Dependent, A=Advised, N=Not used

Segments

No	Tag	St	MaxOcc	Level	Name
	SG11	O	9999	1	**Despatch control line / List of handling unit groups**
	SG12	R	1	2	**Handling unit group details**
	SG14	R	1000	3	**List of individual handling units**
	SG16	R	1	4	**Individual handling unit's transport label number**
27	**GIN**	M	1	4	**Individual handling unit's transport label number**

		Standard		Implementation		
Tag	Name	St	Format	St	Format	Usage / Remark
GIN						
7405	Object identification code qualifier	M	an..3	M	an..3	**ML Marking/label number** ML = Label ID of supplier
C208	Identity number range	M		M		
7402	Object identifier	M	an..35	M	an9	Label ID of the logistics package unit assigned by shipper(e.g. 000012345). Packages include also compartments in a JIS container or a virtual container (se process documentation and packaging examples). If the license plate is used (globally unique package ID) then it is strongly advised to use the second DE 7402 as well to transmit the complete ID. With regard to existing legacy systems only numeric values with up to 9 digits shall be used.
7402	Object identifier	C	an..35	R	an22	Im Voll- und Leergutprozess werden die DI 5J und 6J verwendet. Diese unterliegen der Längenbeschränkung 20 Zeichen ohne DI. Label ID of the handling unit (license plate), consisting of the issuing agency code (IAC) (e.g. UN for Dun & Breadstreet), the company code of the shipper (e.g. DUNS number) plus the unique ID of the shipping unit assigned by shipper, who was identified e.g. with the DUNS number (e.g. 000012345) => UN123456789000012345 The format ist either an..20 for the example as shown above or an..22 in case the data identifier is included (e.g. 6J). The format consists of: DI: an2 IAC: an2 CID: an..9 SN: n..9 If the content of the message is used to generate labels or shipping documents, then transmitting the complete ID is strongly recommended. Handling units and packages shall be identifyable by globally unique identifiers. This data element is amongs other purposes used by form generators to print these unique identifiers.
C208	Identity number range	C		N		
7402	Object identifier	M	an..35	N		Not used
7402	Object identifier	C	an..35	N		Not used
C208	Identity number range	C		N		
7402	Object identifier	M	an..35	N		Not used
7402	Object identifier	C	an..35	N		Not used
C208	Identity number range	C		N		
7402	Object identifier	M	an..35	N		Not used

No = Consecutive segment number
MaxOcc = Maximum occurrence of the segment/group
St = Status, EDIFACT: M=Mandatory, C=Conditional
User specific: R=Required, O=Optional, D=Dependent, A=Advised, N=Not used

Segments

		Standard		Implementation		
Tag	Name	St	Format	St	Format	Usage / Remark
7402	Object identifier	C	an..35	N		Not used
C208	Identity number range	C		N		
7402	Object identifier	M	an..35	N		Not used
7402	Object identifier	C	an..35	N		Not used

Remark:
The unique identifier of a loading unit usually consists of the Data Identifier (e.g. 5J), the Company Identification Number of the ship from (e.g. UN987654321 for the DUNS number) and the serial number of the shipping unit.

Example:
```
GIN+ML+631178407:6JUN315735852631178407'
```

No = Consecutive segment number
MaxOcc = Maximum occurrence of the segment/group
St = Status, EDIFACT: M=Mandatory, C=Conditional
User specific: R=Required, O=Optional, D=Dependent, A=Advised, N=Not used

Segments

No	Tag	St	MaxOcc	Level	Name
	SG11	O	9999	1	**Despatch control line / List of handling unit groups**
	SG12	R	1	2	**Handling unit group details**
	SG14	R	1000	3	**List of individual handling units**
	SG16	R	97	4	**Label / package ID of contained packaging items**
	The total number of the SG16-GIN must not exceed 99 per PCI segment group.				
28	**GIN**	M	1	4	**Individual packaging item's label numbers**

		Standard		Implementation		
Tag	Name	St	Format	St	Format	Usage / Remark
GIN						
7405	Object identification code qualifier	M	an..3	M	an..3	**AW Serial shipping container code** Interpretation: package numbers of contained packages
C208	Identity number range	M		M		
7402	Object identifier	M	an..35	M	an..35	ID of the included packaging item in an outer or intermediate packaging. This may concern a compartment in a JIS container or it may be a virtual container (see process documentation and packaging examples).
7402	Object identifier	C	an..35	N		Not used
C208	Identity number range	C		O		
7402	Object identifier	M	an..35	M	an..17	see DE 7402#1
7402	Object identifier	C	an..35	N		Not used
C208	Identity number range	C		O		
7402	Object identifier	M	an..35	M	an..17	see DE 7402#1
7402	Object identifier	C	an..35	N		Not used
C208	Identity number range	C		O		
7402	Object identifier	M	an..35	M	an..17	see DE 7402#1
7402	Object identifier	C	an..35	N		Not used
C208	Identity number range	C		O		
7402	Object identifier	M	an..35	M	an..17	see DE 7402#1
7402	Object identifier	C	an..35	N		Not used

Remark:
List of or packages contained in the identified handling unit.

Example:
```
GIN+AW+631178383+631178384+631178385+631178386 +631178387'
```

No = Consecutive segment number
MaxOcc = Maximum occurrence of the segment/group
St = Status, EDIFACT: M=Mandatory, C=Conditional
User specific: R=Required, O=Optional, D=Dependent, A=Advised, N=Not used

Segments

No	Tag	St	MaxOcc	Level	Name
	SG11	O	9999	1	**Despatch control line / List of handling unit groups**
	SG12	R	1	2	**Handling unit group details**
	SG14	R	1000	3	**List of individual handling units**
	SG17	O	1	4	**Individual handling unit's weights and quantity of parts (optional)**
29	**COD**	M	1	4	**Trigger segment**

		Standard		Implementation		
Tag	Name	St	Format	St	Format	Usage / Remark
COD						
C823	Type of unit/component	C		R		
7505	Unit or component type description code	C	an..3	R	an..3	**NO** This segment is only used as a trigger with dummy code NO.
1131	Code list identification code	C	an..17	N		Not used
3055	Code list responsible agency code	C	an..3	N		Not used
7504	Unit or component type description	C	an..35	N		Not used
C824	Component material	C		N		
7507	Component material description code	C	an..3	N		Not used
1131	Code list identification code	C	an..17	N		Not used
3055	Code list responsible agency code	C	an..3	N		Not used
7506	Component material description	C	an..35	N		Not used

Remark:

Example:

```
COD+NO'
```

No = Consecutive segment number
MaxOcc = Maximum occurrence of the segment/group
St = Status, EDIFACT: M=Mandatory, C=Conditional
User specific: R=Required, O=Optional, D=Dependent, A=Advised, N=Not used

Segments

No	Tag	St	MaxOcc	Level	Name
	SG11	O	9999	1	**Despatch control line / List of handling unit groups**
	SG12	R	1	2	**Handling unit group details**
	SG14	R	1000	3	**List of individual handling units**
	SG17	O	1	4	**Individual handling unit's weights and quantity of parts (optional)**
30	**MEA**	R	1	5	**Gross weight of the (individual) transport loading unit**

		Standard		Implementation		
Tag	Name	St	Format	St	Format	Usage / Remark
MEA						
6311	Measurement purpose code qualifier	M	an..3	M	an..3	**AAZ Handling unit measurement**
C502	Measurement details	C		R		
6313	Measured attribute code	C	an..3	R	an..3	**AAB Goods item gross weight**
6321	Measurement significance code	C	an..3	N		Not used
6155	Non-discrete measurement name code	C	an..17	N		Not used
6154	Non-discrete measurement name	C	an..70	N		Not used
C174	Value/range	C		R		
6411	Measurement unit code	C	an..8	R	an..8	**KGM kilogram**
6314	Measure	C	an..18	R	n..12	Gross weight
6162	Range minimum quantity	C	n..18	N		Not used
6152	Range maximum quantity	C	n..18	N		Not used
6432	Significant digits quantity	C	n..2	N		Not used
7383	Surface or layer code	C	an..3	N		Not used

Remark:
Weights are transmitted per individual loading unit.

Example:
```
MEA+AAZ+AAB+KGM:447'
```

No = Consecutive segment number
MaxOcc = Maximum occurrence of the segment/group
St = Status, EDIFACT: M=Mandatory, C=Conditional
User specific: R=Required, O=Optional, D=Dependent, A=Advised, N=Not used

Segments

No	Tag	St	MaxOcc	Level	Name
	SG11	O	9999	1	**Despatch control line / List of handling unit groups**
	SG12	R	1	2	**Handling unit group details**
	SG14	R	1000	3	**List of individual handling units**
	SG17	O	1	4	**Individual handling unit's weights and quantity of parts (optional)**
31	**MEA**	R	1	5	**Net weight of the (individual) transport loading unit**

		Standard		Implementation		
Tag	Name	St	Format	St	Format	Usage / Remark
MEA						
6311	Measurement purpose code qualifier	M	an..3	M	an..3	**AAZ Handling unit measurement**
C502	Measurement details	C		R		
6313	Measured attribute code	C	an..3	R	an..3	**AAA Net weight**
6321	Measurement significance code	C	an..3	N		Not used
6155	Non-discrete measurement name code	C	an..17	N		Not used
6154	Non-discrete measurement name	C	an..70	N		Not used
C174	Value/range	C		R		
6411	Measurement unit code	C	an..8	R	an..8	**KGM kilogram**
6314	Measure	C	an..18	R	an..18	Net weight
6162	Range minimum quantity	C	n..18	N		Not used
6152	Range maximum quantity	C	n..18	N		Not used
6432	Significant digits quantity	C	n..2	N		Not used
7383	Surface or layer code	C	an..3	N		Not used

Remark:
Weights are transmitted per individual loading unit.

Example:
```
MEA+AAZ+AAA+KGM:437'
```

No = Consecutive segment number
MaxOcc = Maximum occurrence of the segment/group
St = Status, EDIFACT: M=Mandatory, C=Conditional
User specific: R=Required, O=Optional, D=Dependent, A=Advised, N=Not used

Segments

No	Tag	St	MaxOcc	Level	Name
	SG11	O	9999	1	**Despatch control line / List of handling unit groups**
	SG12	R	1	2	**Handling unit group details**
	SG14	R	1000	3	**List of individual handling units**
	SG17	O	1	4	**Individual handling unit's weights and quantity of parts (optional)**
32	**QTY**	D	9	5	**Quantity of parts in homogeneous handling units.**

		Standard		Implementation		
Tag	Name	St	Format	St	Format	Usage / Remark
QTY						
C186	Quantity details	M		M		
6063	Quantity type code qualifier	M	an..3	M	an..3	**52 Quantity per pack**
6060	Quantity	M	an..35	M	an..35	Quantity of parts per homogeneous handling unit.
6411	Measurement unit code	C	an..8	R	an..8	PCE and C62 are synonymous for piece **C62 one** **DR drum** **PCE piece** **SET set** **MTR metre** **MLT millilitre** **CMT centimetre** **MMT millimetre** **MTK square metre** **LEF leaf** **MTQ cubic metre** **LTR litre** **PR pair** **RO roll** **TNE tonne (metric ton)** **KGM kilogram** **GRM gram** **KMT kilometre**

Remark:
This segment can only be used with handling units carrying a master label (data identifier 6J). Usually the supplier has to print the quantity of parts carried by these handling units on the transport label. The QTY segment can be used to transmit this quantity.

Example:
```
QTY+52:9:PCE'
```

No = Consecutive segment number
MaxOcc = Maximum occurrence of the segment/group
St = Status, EDIFACT: M=Mandatory, C=Conditional
User specific: R=Required, O=Optional, D=Dependent, A=Advised, N=Not used

Segments

No	Tag	St	MaxOcc	Level	Name
	SG11	O	9999	1	**Despatch control line / List of handling unit groups**
	SG12	O	9999	2	**Packaging aid**

All SG12s in the group of the outer loading units or intermediate level (SG11) must not exceed the 9999 in total.

33	**PAC**	M	1	2	**Packaging aid**

		Standard		Implementation		
Tag	Name	St	Format	St	Format	Usage / Remark
PAC						
7224	Package quantity	C	n..8	R	n..8	
C531	Packaging details	C		R		
7075	Packaging level code	C	an..3	N		Not used
7233	Packaging related description code	C	an..3	R	an..3	**37 Package protection** Code 37 is used to identify a packaging aid
7073	Packaging terms and conditions code	C	an..3	O	an..3	Code for packaging terms and conditions **AAA One way packaging, supplier pays** **AAB One way packaging, customer pays** **AAC Customer's returnable package item** **AAD Supplier's returnable package item** **AAE Service provider's returnable package item** Currently not used
C202	Package type	C		O		
7065	Package type description code	C	an..17	R	an..17	Code of packaging designation (packaging code of customer)
1131	Code list identification code	C	an..17	N		Not used
3055	Code list responsible agency code	C	an..3	O	an..3	**92 Assigned by buyer or buyer's agent**
7064	Type of packages	C	an..35	N		Not used
C402	Package type identification	C		O		
7077	Description format code	M	an..3	M	an..3	**X Semi-structured (code + text)**
7064	Type of packages	M	an..35	M	an..35	Designation of packaging (packaging code of supplier). According to EDIFACT, this element is mandatory. If this DE group is to be used and the supplier has not specified a packaging code, enter here the same value as in DE 7064 (VDA code).
7143	Item type identification code	C	an..3	O	an..3	**SA Supplier's article number**
7064	Type of packages	C	an..35	O	an..35	Designation of packaging, VDA code list (see separate documentation)
7143	Item type identification code	C	an..3	N		Not used
C532	Returnable package details	C		N		
8395	Returnable package freight payment responsibility code	C	an..3	N		Not used
8393	Returnable package load contents code	C	an..3	N		Not used

Remark:
Identical auxiliary packages must be transmitted consolidated in one PAC segment
This PAC segment group describes the packages and their caracteristics.
Identical packaging aids that belong to same kind of loading units MUST be aggregated. The packaging aids must be transmitted after the main packaging in one CPS group. For grouping criteria, see the process description and the packaging examples.
Basically all reusable packaging actually used are given here in a structured form.

Example:
```
PAC+1+:37:AAA+3044H0-000::92+X:001208:SA:X'
```

No = Consecutive segment number
MaxOcc = Maximum occurrence of the segment/group
St = Status, EDIFACT: M=Mandatory, C=Conditional
User specific: R=Required, O=Optional, D=Dependent, A=Advised, N=Not used

Segments

No	Tag	St	MaxOcc	Level	Name
	SG11	R	9999	1	**Despatch control line / group of inner packaging items article identification and delivery quantity**
34	**CPS**	M	1	1	**Consignment packing sequence**

		Standard		Implementation		
Tag	Name	St	Format	St	Format	Usage / Remark
CPS						
7164	Hierarchical structure level identifier	M	an..35	R	n..6	Line Number Incremented counter generated by message sender, assigned to a packaging group in the message. We recommend starting at 1.
7166	Hierarchical structure parent identifier	C	an..35	N		Not used
7075	Packaging level code	C	an..3	R	an..3	If Code 4 is used, no parent relationship exists (simplified handling unit concept). **1 Inner** **4 No packaging hierarchy** Code specifying the packaging level.

Remark:
The message is structured from the outside inwards. First enter the handling units, then packaging items contained in the handling units. For detailed instructions regarding packaging structures, see separate documentation in the appendix of the VDA recommendation.

An explicit link between packaging aid and innermost main packaging items is not necessary.

As the message must support a one-to-one relationships between batch, best before date and delivery note line item, generate a separate SG 11 with trigger CPS for each batch, best before date, etc.

If packaging items are the same, they can be summarised. he same means in the context of this document means: samepackage type, same packaging aid, same number of packaging aid, same quantity per innermost packaging, same part number, batch number, same expiry date etc. - see the detailed process description and remark in LIN segment. They constitute then a group of packaging items (SG11).

Example:
```
CPS+2++1'
```

No = Consecutive segment number
MaxOcc = Maximum occurrence of the segment/group
St = Status, EDIFACT: M=Mandatory, C=Conditional
User specific: R=Required, O=Optional, D=Dependent, A=Advised, N=Not used

Segments

No	Tag	St	MaxOcc	Level	Name
	SG11	R	9999	1	**Despatch control line / group of inner packaging items article identification and delivery quantity**
	SG12	O	1	2	**Group of inner packaging items**
	The number of SG 12 in a group of inner packaging items shall not exceed 9999.				
35	**PAC**	M	1	2	**Package**

		Standard		Implementation		
Tag	Name	St	Format	St	Format	Usage / Remark
PAC						
7224	Package quantity	C	n..8	R	n..4	Number of packages assigned to this group (number of identical packages).
C531	Packaging details	C		R		
7075	Packaging level code	C	an..3	N		Not used
7233	Packaging related description code	C	an..3	R	an..3	**35 Type of package** Code 35 identifies main packaging
7073	Packaging terms and conditions code	C	an..3	O	an..3	Currently not used **AAA One way packaging, supplier pays** **AAB One way packaging, customer pays** **AAC Customer's returnable package item** **AAD Supplier's returnable package item** **AAE Service provider's returnable package item**
C202	Package type	C		R		Packaging type specified by customer
7065	Package type description code	C	an..17	R	an..17	Designation of packaging (packaging code of customer)
1131	Code list identification code	C	an..17	N		Not used
3055	Code list responsible agency code	C	an..3	O	an..3	**92 Assigned by buyer or buyer's agent**
7064	Type of packages	C	an..35	N		Not used
C402	Package type identification	C		O		
7077	Description format code	M	an..3	M	an..3	**X Semi-structured (code + text)**
7064	Type of packages	M	an..35	M	an..35	Designation of packaging (packaging code of supplier). According to EDIFACT, this element is mandatory. If this DE group is to be used and the supplier has not defined internal packaging codes, enter the same value as in DE 7064 for VDA code.
7143	Item type identification code	C	an..3	O	an..3	**SA Supplier's article number**
7064	Type of packages	C	an..35	O	an..35	Designation of packaging, VDA code list (see separate documentation)
7143	Item type identification code	C	an..3	N		Not used
C532	Returnable package details	C		N		
8395	Returnable package freight payment responsibility code	C	an..3	N		Not used
8393	Returnable package load contents code	C	an..3	N		Not used

Remark:
This variant of SG12 is used to describe the simplified type of handling units or shipping packaging units that corresponds to a specific design, with specifying properties such as dimensions, material, etc.

Example:
```
PAC+24+:35:AAC+3044EC-000::92+X:006147:SA:X'
```

No = Consecutive segment number
MaxOcc = Maximum occurrence of the segment/group
St = Status, EDIFACT: M=Mandatory, C=Conditional
User specific: R=Required, O=Optional, D=Dependent, A=Advised, N=Not used

Segments

No	Tag	St	MaxOcc	Level	Name
	SG11	R	9999	1	**Despatch control line / group of inner packaging items article identification and delivery quantity**
	SG12	O	1	2	**Group of inner packaging items**
	The number of SG 12 in a group of inner packaging items shall not exceed 9999.				
36	**MEA**	R	1	3	**Gross weight of the (individual) packaging item**

		Standard		Implementation		
Tag	Name	St	Format	St	Format	Usage / Remark
MEA						
6311	Measurement purpose code qualifier	M	an..3	M	an..3	**AAY Package measurement**
C502	Measurement details	C		R		
6313	Measured attribute code	C	an..3	R	an..3	**G Gross weight**
6321	Measurement significance code	C	an..3	N		Not used
6155	Non-discrete measurement name code	C	an..17	N		Not used
6154	Non-discrete measurement name	C	an..70	N		Not used
C174	Value/range	C		R		
6411	Measurement unit code	C	an..8	R	an..8	**KGM kilogram**
6314	Measure	C	an..18	R	an..18	Gross weight - weight (mass) without carrier's equipment
6162	Range minimum quantity	C	n..18	N		Not used
6152	Range maximum quantity	C	n..18	N		Not used
6432	Significant digits quantity	C	n..2	N		Not used
7383	Surface or layer code	C	an..3	N		Not used

Remark:

Example:

```
MEA+AAY+G+KGM:15'
```

No = Consecutive segment number
MaxOcc = Maximum occurrence of the segment/group
St = Status, EDIFACT: M=Mandatory, C=Conditional
User specific: R=Required, O=Optional, D=Dependent, A=Advised, N=Not used

Segments

No	Tag	St	MaxOcc	Level	Name
	SG11	R	9999	1	**Despatch control line / group of inner packaging items article identification and delivery quantity**
	SG12	O	1	2	**Group of inner packaging items**
	The number of SG 12 in a group of inner packaging items shall not exceed 9999.				
37	**MEA**	R	1	3	**Net weight of the (individual) packaging item**

		Standard		Implementation		
Tag	Name	St	Format	St	Format	Usage / Remark
MEA						
6311	Measurement purpose code qualifier	M	an..3	M	an..3	**AAY Package measurement**
C502	Measurement details	C		R		
6313	Measured attribute code	C	an..3	R	an..3	**AAL Net weight**
6321	Measurement significance code	C	an..3	N		Not used
6155	Non-discrete measurement name code	C	an..17	N		Not used
6154	Non-discrete measurement name	C	an..70	N		Not used
C174	Value/range	C		R		
6411	Measurement unit code	C	an..8	R	an..8	**KGM kilogram**
6314	Measure	C	an..18	R	an..18	Mass of the items contained in the inner packaging including optional sales package.
6162	Range minimum quantity	C	n..18	N		Not used
6152	Range maximum quantity	C	n..18	N		Not used
6432	Significant digits quantity	C	n..2	N		Not used
7383	Surface or layer code	C	an..3	N		Not used

Remark:

Example:

```
MEA+AAY+AAL+KGM:14'
```

No = Consecutive segment number
MaxOcc = Maximum occurrence of the segment/group
St = Status, EDIFACT: M=Mandatory, C=Conditional
User specific: R=Required, O=Optional, D=Dependent, A=Advised, N=Not used

Segments

No	Tag	St	MaxOcc	Level	Name
	SG11	R	9999	1	**Despatch control line / group of inner packaging items article identification and delivery quantity**
	SG12	O	1	2	**Group of inner packaging items**
	The number of SG 12 in a group of inner packaging items shall not exceed 9999.				
38	**MEA**	O	1	3	**Package volume**

		Standard		Implementation		
Tag	Name	St	Format	St	Format	Usage / Remark
MEA						
6311	Measurement purpose code qualifier	M	an..3	M	an..3	**AAY Package measurement**
C502	Measurement details	C		R		
6313	Measured attribute code	C	an..3	R	an..3	**ABJ Volume**
6321	Measurement significance code	C	an..3	N		Not used
6155	Non-discrete measurement name code	C	an..17	N		Not used
6154	Non-discrete measurement name	C	an..70	N		Not used
C174	Value/range	C		R		
6411	Measurement unit code	C	an..8	R	an..8	cubic metre cubic decimetre litre **LTR litre** **DMQ cubic decimetre** **MTQ cubic metre**
6314	Measure	C	an..18	R	an..18	Volume
6162	Range minimum quantity	C	n..18	N		Not used
6152	Range maximum quantity	C	n..18	N		Not used
6432	Significant digits quantity	C	n..2	N		Not used
7383	Surface or layer code	C	an..3	N		Not used

Remark:

Example:

```
MEA+AAY+ABJ+DMQ:13'
```

No = Consecutive segment number
MaxOcc = Maximum occurrence of the segment/group
St = Status, EDIFACT: M=Mandatory, C=Conditional
User specific: R=Required, O=Optional, D=Dependent, A=Advised, N=Not used

Segments

No	Tag	St	MaxOcc	Level	Name
	SG11	R	9999	1	**Despatch control line / group of inner packaging items article identification and delivery quantity**
	SG12	O	1	2	**Group of inner packaging items**
	The number of SG 12 in a group of inner packaging items shall not exceed 9999.				
39	**QTY**	R	1	3	**Actual quantity per package**

		Standard		Implementation		
Tag	Name	St	Format	St	Format	Usage / Remark
QTY						
C186	Quantity details	M		M		
6063	Quantity type code qualifier	M	an..3	M	an..3	**52 Quantity per pack**
6060	Quantity	M	an..35	M	an..35	Quantity (actual) per package
6411	Measurement unit code	C	an..8	R	an..8	**C62 one** **PCE piece** **SET set** **MTR metre** **CMT centimetre** **MMT millimetre** **MTK square metre** **LEF leaf** **MTQ cubic metre** **LTR litre** **PR pair** **RO roll** **TNE tonne (metric ton)** **KGM kilogram** **GRM gram** **KMT kilometre** **DR drum** **MLT millilitre** PCE and C62 are synonyms for "piece"

Remark:

Example:

```
QTY+52:15:PCE'
```

No = Consecutive segment number
MaxOcc = Maximum occurrence of the segment/group
St = Status, EDIFACT: M=Mandatory, C=Conditional
User specific: R=Required, O=Optional, D=Dependent, A=Advised, N=Not used

Segments

No	Tag	St	MaxOcc	Level	Name
	SG11	R	9999	1	**Despatch control line / group of inner packaging items article identification and delivery quantity**
	SG12	O	1	2	**Group of inner packaging items**
	The number of SG 12 in a group of inner packaging items shall not exceed 9999.				
	SG14	O	1000	3	**List of individual package items**
40	**PCI**	M	1	3	**Package identification**

		Standard		Implementation		
Tag	Name	St	Format	St	Format	Usage / Remark
PCI						
4233	Marking instructions code	C	an..3	R	an..3	**17 Seller's instructions**
C210	Marks & labels	C		N		
7102	Shipping marks description	M	an..35	N		Not used
7102	Shipping marks description	C	an..35	N		Not used
7102	Shipping marks description	C	an..35	N		Not used
7102	Shipping marks description	C	an..35	N		Not used
7102	Shipping marks description	C	an..35	N		Not used
7102	Shipping marks description	C	an..35	N		Not used
7102	Shipping marks description	C	an..35	N		Not used
7102	Shipping marks description	C	an..35	N		Not used
7102	Shipping marks description	C	an..35	N		Not used
7102	Shipping marks description	C	an..35	N		Not used
8169	Full or empty indicator code	C	an..3	N		Not used
C827	Type of marking	C		R		
7511	Marking type code	M	an..3	M	an..3	**1J Unique license plate number lowest package level** Data identifier indicating the type of TPU and preceding the license plate (unique ID of the TPU) in bar-code or RFID representation The Data Identifier (DI) of the label is the first part of the transport label. It identifies the label as the outer or inner packaging label. For the outer packaging, it is possible to distinguish between master label and mixed label. In the Global Transport Label documentation, this element is referred to as data identifier. 1J corresponds for LAB/JIT to former S = single label.
1131	Code list identification code	C	an..17	N		Not used
3055	Code list responsible agency code	C	an..3	R	an..3	**5 ISO (International Organization for Standardization)** Code specifying the agency responsible for a code list.

Remark:
If the production date, the expiry date, the best before date... (for complete listing, see LIN segment) relevant for the parts of the batch in the container, structure SG 14 must be followed, as it allows for unambiguous assignment of the packaging ID to this data. A change in one of these values does not automatically result in a change of group/new SG 11.

Data element 4233 should contain the constant "17" to prevent that the segment is blank, if no additional information is transmitted in the PCI segment.

Example:
```
PCI+17+++1J::5'
```

No = Consecutive segment number
MaxOcc = Maximum occurrence of the segment/group
St = Status, EDIFACT: M=Mandatory, C=Conditional
User specific: R=Required, O=Optional, D=Dependent, A=Advised, N=Not used

Segments

No	Tag	St	MaxOcc	Level	Name
	SG11	R	9999	1	**Despatch control line / group of inner packaging items article identification and delivery quantity**
	SG12	O	1	2	**Group of inner packaging items**
	The number of SG 12 in a group of inner packaging items shall not exceed 9999.				
	SG14	O	1000	3	**List of individual package items**
	SG15	D	1	4	**Batch number, production**
	Relevant for material with batch requirement				
41	**GIR**	M	1	4	**Batch number**

		Standard		Implementation		
Tag	Name	St	Format	St	Format	Usage / Remark
GIR						
7297	Set type code qualifier	M	an..3	M	an..3	**1 Product**
C206	Identification number	M		M		
7402	Object identifier	M	an..35	M	an..10	Batch number - if the production date is to be transmitted without a batch number, this field must be set to NONE, as EDIFACT requires that this field is not empty. **Batch number**
7405	Object identification code qualifier	C	an..3	R	an..3	**BX Batch number**
4405	Status description code	C	an..3	N		Not used
C206	Identification number	C		N		
7402	Object identifier	M	an..35	N		Not used
7405	Object identification code qualifier	C	an..3	N		Not used
4405	Status description code	C	an..3	N		Not used
C206	Identification number	C		N		
7402	Object identifier	M	an..35	N		Not used
7405	Object identification code qualifier	C	an..3	N		Not used
4405	Status description code	C	an..3	N		Not used
C206	Identification number	C		N		
7402	Object identifier	M	an..35	N		Not used
7405	Object identification code qualifier	C	an..3	N		Not used
4405	Status description code	C	an..3	N		Not used
C206	Identification number	C		N		
7402	Object identifier	M	an..35	N		Not used
7405	Object identification code qualifier	C	an..3	N		Not used
4405	Status description code	C	an..3	N		Not used

Remark:

Example:

```
GIR+1+Charge:BX'
```

No = Consecutive segment number
MaxOcc = Maximum occurrence of the segment/group
St = Status, EDIFACT: M=Mandatory, C=Conditional
User specific: R=Required, O=Optional, D=Dependent, A=Advised, N=Not used

Segments

No	Tag	St	MaxOcc	Level	Name
	SG11	R	9999	1	**Despatch control line / group of inner packaging items article identification and delivery quantity**
	SG12	O	1	2	**Group of inner packaging items**
	The number of SG 12 in a group of inner packaging items shall not exceed 9999.				
	SG14	O	1000	3	**List of individual package items**
	SG15	D	1	4	**Batch number, production**
	Relevant for material with batch requirement				
42	**DTM**	D	2	5	**Manufacturing date / Expiry date**

		Standard		Implementation		
Tag	Name	St	Format	St	Format	Usage / Remark
DTM						
C507	Date/time/period	M		M		
2005	Date or time or period function code qualifier	M	an..3	M	an..3	**94 Production/manufacture date** **36 Expiry date**
2380	Date or time or period text	C	an..35	R	n..12	Date according to qualifier in DE 2005
2379	Date or time or period format code	C	an..3	R	an..3	**102 CCYYMMDD**

Remark:
All parts/products in a container must have the same production date / best before date (if applicable).

Example:
```
DTM+94:20230131:102'
```

No = Consecutive segment number
MaxOcc = Maximum occurrence of the segment/group
St = Status, EDIFACT: M=Mandatory, C=Conditional
User specific: R=Required, O=Optional, D=Dependent, A=Advised, N=Not used

Segments

No	Tag	St	MaxOcc	Level	Name
	SG11	R	9999	1	**Despatch control line / group of inner packaging items article identification and delivery quantity**
	SG12	O	1	2	**Group of inner packaging items**
	The number of SG 12 in a group of inner packaging items shall not exceed 9999.				
	SG14	O	1000	3	**List of individual package items**
	SG16	R	99	4	**Label number(s)**
43	**GIN**	M	1	4	**Label IDs**

		Standard		Implementation		
Tag	Name	St	Format	St	Format	Usage / Remark
GIN						
7405	Object identification code qualifier	M	an..3	M	an..3	ML = package number specified by supplier **ML Marking/label number**
C208	Identity number range	M		M		
7402	Object identifier	M	an..35	R	n..9	Label ID of the innermost logistics package unit assigned by shipper (e.g. 000012345) Label ID of the logistics package unit assigned by shipper(e.g. 000012345). Packages include also compartments in a JIS container or a virtual container (se process documentation and packaging examples). If the license plate is used (globally unique package ID) then it is strongly advised to use the second DE 7402 as well to transmit the complete ID.
7402	Object identifier	C	an..35	R	an22	Globally unique package ID of the innermost logistics package unit (license plate), consisting of the data identifier (DI) of the handling unit (e.g. 1J), the issuing agency code (IAC) (e.g. UN for Dun & Breadstreet), the company code of the shipper (e.g. DUNS number) plus the unique ID of the shipping unit assigned by shipper, who was identified e.g. with the DUNS number (e.g. 000012345) => UN123456789000012345 It is recommeded to use globally unique package IDs. If the message is used to generate shipment documents or labels, this data element is the source for the package ID. The format ist either an..20 for the example as shown above or an..22 in case the data identifier is included (1J). The format consists of: DI: an2 IAC: an2 CID: an..9 SN: n..9
C208	Identity number range	C		O		
7402	Object identifier	M	an..35	R	n..9	see 7402 #1
7402	Object identifier	C	an..35	D	an..22	see 7402 #2
C208	Identity number range	C		O		
7402	Object identifier	M	an..35	R	n..9	see 7402 #1
7402	Object identifier	C	an..35	D	an..22	see 7402 #2
C208	Identity number range	C		O		
7402	Object identifier	M	an..35	R	n..9	see 7402 #1
7402	Object identifier	C	an..35	D	an..22	see 7402 #2
C208	Identity number range	C		O		

No = Consecutive segment number
MaxOcc = Maximum occurrence of the segment/group
St = Status, EDIFACT: M=Mandatory, C=Conditional
User specific: R=Required, O=Optional, D=Dependent, A=Advised, N=Not used

Segments

		Standard		Implementation		
Tag	Name	St	Format	St	Format	Usage / Remark
7402	Object identifier	M	an..35	R	n..9	see 7402 #1
7402	Object identifier	C	an..35	D	an..22	see 7402 #2

Remark:
If correct assignment of the various package IDs is required, generate a separate SG14 for each package.
If this is not the case, the list can be transmitted with the respective IDs in the relevant GIN segment. The total number of SG16 must not exceed 99

Example:

```
GIN+ML+631178383:1JUN315735852631178383+631178384:1JUN315735852631178384+631178385:1JUN31573585263
1178385+631178386:1JUN315735852631178386+631178387:1JUN315735852631178387'
```

No = Consecutive segment number
MaxOcc = Maximum occurrence of the segment/group
St = Status, EDIFACT: M=Mandatory, C=Conditional
User specific: R=Required, O=Optional, D=Dependent, A=Advised, N=Not used

Segments

No	Tag	St	MaxOcc	Level	Name
	SG11	R	9999	1	**Despatch control line / group of inner packaging items article identification and delivery quantity**
	SG12	O	9999	2	**Packaging aid**
	The number of SG 12 in a group of inner packaging items shall not exceed 9999.				
44	**PAC**	M	1	2	**Packaging aid**

		Standard		Implementation		
Tag	Name	St	Format	St	Format	Usage / Remark
PAC						
7224	Package quantity	C	n..8	R	n..6	The number of additional packaging materials must be a whole number multiple of the loading units (main packaging material) so that they are assignable.
C531	Packaging details	C		R		
7075	Packaging level code	C	an..3	N		Not used
7233	Packaging related description code	C	an..3	R	an..3	**37 Package protection** Code 37 is used to identify a packaging aid
7073	Packaging terms and conditions code	C	an..3	O	an..3	Currently not used A code identifying the ownership of packaging aids and other conditions. **AAA One way packaging, supplier pays** **AAB One way packaging, customer pays** **AAC Customer's returnable package item** **AAD Supplier's returnable package item** **AAE Service provider's returnable package item**
C202	Package type	C		R		
7065	Package type description code	C	an..17	R	an..17	Code of packaging designation (packaging code of customer)
1131	Code list identification code	C	an..17	N		Not used
3055	Code list responsible agency code	C	an..3	O	an..3	**92 Assigned by buyer or buyer's agent**
7064	Type of packages	C	an..35	N		Not used
C402	Package type identification	C		O		
7077	Description format code	M	an..3	M	an..3	**X Semi-structured (code + text)**
7064	Type of packages	M	an..35	M	an..35	Designation of packaging (packaging code of supplier). According to EDIFACT, this element is mandatory. If this DE group is to be used and the supplier has not defined internal packaging codes, enter the same value as in DE 7064 for VDA code.
7143	Item type identification code	C	an..3	O	an..3	**SA Supplier's article number**
7064	Type of packages	C	an..35	O	an..35	Designation of packaging, VDA code list (see separate documentation)
7143	Item type identification code	C	an..3	N		Not used
C532	Returnable package details	C		N		
8395	Returnable package freight payment responsibility code	C	an..3	N		Not used
8393	Returnable package load contents code	C	an..3	N		Not used

Remark:
Identical auxiliary packages must be transmitted consolidated in one PAC segment
This PAC segment group describes the packaging items and their properties.
Identical packaging aids that belong to same kind of loading units MUST be aggregated. The packaging aids must be transmitted after the main packaging in one CPS group. Grouping criteria are fully explained in the process description and packaging examples.
In principle, all actually used reusable packagings are to be specified here in a structured manner.

No = Consecutive segment number
MaxOcc = Maximum occurrence of the segment/group
St = Status, EDIFACT: M=Mandatory, C=Conditional
User specific: R=Required, O=Optional, D=Dependent, A=Advised, N=Not used

Segments

Example:

```
PAC+24+:37:AAC+P03249-000::92+X:080607:SA:080607'
```

No = Consecutive segment number
MaxOcc = Maximum occurrence of the segment/group
St = Status, EDIFACT: M=Mandatory, C=Conditional
User specific: R=Required, O=Optional, D=Dependent, A=Advised, N=Not used

Segments

No	Tag	St	MaxOcc	Level	Name
	SG11	R	9999	1	**Despatch control line / group of inner packaging items article identification and delivery quantity**
	SG19	R	9999	2	**Article identification and despatch quantity**
45	**LIN**	M	1	2	**Customer's part or article number**

		Standard		Implementation		
Tag	Name	St	Format	St	Format	Usage / Remark
LIN						
1082	Line item identifier	C	an..6	N		Not used
1229	Action code	C	an..3	N		Not used
C212	Item number identification	C		R		
7140	Item identifier	C	an..35	R	an..35	ID of article (part number), assigned by customer Note: the term "article" is synonymous to "part" or "product".
7143	Item type identification code	C	an..3	R	an..3	**IN Buyer's item number**
1131	Code list identification code	C	an..17	N		Not used
3055	Code list responsible agency code	C	an..3	N		Not used
C829	Sub-line information	C		N		
5495	Sub-line indicator code	C	an..3	N		Not used
1082	Line item identifier	C	an..6	N		Not used
1222	Configuration level number	C	n..2	N		Not used
7083	Configuration operation code	C	an..3	N		Not used

Remark:
One LIN segment group represents either
a) one delivery note position of the shipment (in case of so called one-positional delivery notes the whole document) or
b) the partial delivery quantity per handling unit (or group of identical handling units).

Keys for a new delivery note position are:
- batch number
- manufacturing date
- best before date
- expiry date

all specified on the inner package level
and on line item level:
- article / part number
- order number
- hardware version
- Software version
- Drawing revision number (DR)

Please note:
If parts belonging to one delivery note position are packed in different loading units or simplified loading units, then a separate SG19 has to be created for each of those loading units (or group of identical loading units) including the split quantity for this loading unit (or group of identical loading units) in QTY+11 and the total delivery quantity of this delivery note position in QTY+12.

In other words: if there are several SG19 with the same delivery note number and delivery note position, then it is required to include the split quantity in QTY+11 in addition to the total delivery quantity in QTY+12. The total delivery quantity (QTY+12) is then transmitted redundantly in each SG19.

Example:
```
LIN+++A62404-110:IN'
```

No = Consecutive segment number
MaxOcc = Maximum occurrence of the segment/group
St = Status, EDIFACT: M=Mandatory, C=Conditional
User specific: R=Required, O=Optional, D=Dependent, A=Advised, N=Not used

Segments

No	Tag	St	MaxOcc	Level	Name
	SG11	R	9999	1	**Despatch control line / group of inner packaging items article identification and delivery quantity**
	SG19	R	9999	2	**Article identification and despatch quantity**
46	**PIA**	D	10	3	**Additional product id**

		Standard		Implementation		
Tag	Name	St	Format	St	Format	Usage / Remark
PIA						
4347	Product identifier code qualifier	M	an..3	R	an..3	**1 Additional identification**
C212	Item number identification	M		M		
7140	Item identifier	C	an..35	R	an..35	ID number
7143	Item type identification code	C	an..3	R	an..3	AG - Software status BT - Hardware status DR - Parts generation status **AG Software revision number** **BT Technical phase** **SA Supplier's article number** **DR Drawing revision number**
1131	Code list identification code	C	an..17	N		Not used
3055	Code list responsible agency code	C	an..3	N		Not used
C212	Item number identification	C		O		
7140	Item identifier	C	an..35	R	an..35	ID number
7143	Item type identification code	C	an..3	R	an..3	For codes, see C212#1/DE 7143
1131	Code list identification code	C	an..17	N		Not used
3055	Code list responsible agency code	C	an..3	N		Not used
C212	Item number identification	C		O		
7140	Item identifier	C	an..35	R	an..35	ID number
7143	Item type identification code	C	an..3	R	an..3	For codes, see C212#1/DE 7143
1131	Code list identification code	C	an..17	N		Not used
3055	Code list responsible agency code	C	an..3	N		Not used
C212	Item number identification	C		O		
7140	Item identifier	C	an..35	R	an..35	ID number
7143	Item type identification code	C	an..3	R	an..3	For codes, see C212#1/DE 7143
1131	Code list identification code	C	an..17	N		Not used
3055	Code list responsible agency code	C	an..3	N		Not used
C212	Item number identification	C		N		
7140	Item identifier	C	an..35	N		Not used
7143	Item type identification code	C	an..3	N		Not used
1131	Code list identification code	C	an..17	N		Not used
3055	Code list responsible agency code	C	an..3	N		Not used

Remark:
The sequence of the individual IDs in C212 is free. The first C212 must however be filled. The remaining C212 are optional.

Relevant if requested by customer

Example:
```
PIA+1+123456:AG+34567:BT+56789:SA+1234:DR'
```

No = Consecutive segment number
MaxOcc = Maximum occurrence of the segment/group
St = Status, EDIFACT: M=Mandatory, C=Conditional
User specific: R=Required, O=Optional, D=Dependent, A=Advised, N=Not used

Segments

No	Tag	St	MaxOcc	Level	Name
	SG11	R	9999	1	**Despatch control line / group of inner packaging items article identification and delivery quantity**
	SG19	R	9999	2	**Article identification and despatch quantity**
47	**QTY**	R	1	3	**Despatched quantity**

		Standard		Implementation		
Tag	Name	St	Format	St	Format	Usage / Remark
QTY						
C186	Quantity details	M		M		
6063	Quantity type code qualifier	M	an..3	M	an..3	**12 Despatch quantity**
6060	Quantity	M	an..35	M	n..10	Despatched quantity
6411	Measurement unit code	C	an..8	R	an..3	Code specifying the unit of measurement, use UN/ECE Rec. 20 **C62 one** **PCE piece** **SET set** **MTR metre** **CMT centimetre** **MMT millimetre** **MTK square metre** **LEF leaf** **MTQ cubic metre** **LTR litre** **PR pair** **RO roll** **TNE tonne (metric ton)** **KGM kilogram** **GRM gram** **KMT kilometre** **DR drum** **MLT millilitre** PCE and C62 are synonymous for piece

Remark:
This segment is used to transmit the total despatched quantity per delivery note line of the item identified in the LIN segment. If several LIN segment groups are used to transmit the total despatch quantity of the item per delivery note line (e.g. identifying the partial delivery quantity per each handling unit), then this QTY segment has to be included in every of these LIN segment groups.

Example:
```
QTY+12:360:PCE'
```

No = Consecutive segment number
MaxOcc = Maximum occurrence of the segment/group
St = Status, EDIFACT: M=Mandatory, C=Conditional
User specific: R=Required, O=Optional, D=Dependent, A=Advised, N=Not used

Segments

No	Tag	St	MaxOcc	Level	Name
	SG11	R	9999	1	**Despatch control line / group of inner packaging items article identification and delivery quantity**
	SG19	R	9999	2	**Article identification and despatch quantity**
48	**QTY**	D	1	3	**Split Quantity per handling unit or group of handling units**

		Standard		Implementation		
Tag	Name	St	Format	St	Format	Usage / Remark
QTY						
C186	Quantity details	M		M		
6063	Quantity type code qualifier	M	an..3	M	an..3	**11 Split quantity**
6060	Quantity	M	an..35	M	an..35	
6411	Measurement unit code	C	an..8	R	an..8	Code of unit of measurement according to UN/ECE Rec. 20 PCE and C62 are synonyms for "piece". **C62 one** **PCE piece** **SET set** **MTR metre** **CMT centimetre** **MMT millimetre** **MTK square metre** **LEF leaf** **MTQ cubic metre** **LTR litre** **PR pair** **RO roll** **TNE tonne (metric ton)** **KGM kilogram** **GRM gram** **KMT kilometre** **DR drum** **MLT millilitre**

Remark:
If there are several LIN segment groups with the same delivery note number and delivery note position, then it is required to include the split quantity in QTY+11 in addition to the total delivery quantity in QTY+12. The total delivery quantity (QTY+12) is then transmitted redundantly in each LIN segment group.

This QTY segment transmits the despatch quantity per handling unit respectively per group of identical handling units.
It has to be used, if the total despatch quantity per part number is transmitted in several LIN segment groups.

Example:
```
QTY+11:2:PCE'
```

No = Consecutive segment number
MaxOcc = Maximum occurrence of the segment/group
St = Status, EDIFACT: M=Mandatory, C=Conditional
User specific: R=Required, O=Optional, D=Dependent, A=Advised, N=Not used

Segments

No	Tag	St	MaxOcc	Level	Name
	SG11	R	9999	1	**Despatch control line / group of inner packaging items article identification and delivery quantity**
	SG19	R	9999	2	**Article identification and despatch quantity**
49	**ALI**	R	1	3	**Country of origin, duty regime and nature of transaction**

		Standard		Implementation		
Tag	Name	St	Format	St	Format	Usage / Remark
ALI						
3239	Country of origin identifier	C	an..3	R	a2	Country in which the goods have been produced or manufactured; might be required by customs authorities in order to identify the applicable customs tariff, quantity restrictions, etc.
9213	Duty regime type code	C	an..3	D	an..3	**N No, origin is not subject to preference** **Y Yes, origin is subject to preference** Required, if FTX+CUS has been transmitted (declaration of preference). If status is not clear, "N" has to be transmitted. Y = Goods subject to preferential treatment N = Goods not subject to preferential treatment
4183	Special condition code	C	an..3	N		Not used
4183	Special condition code	C	an..3	N		Not used
4183	Special condition code	C	an..3	N		Not used
4183	Special condition code	C	an..3	N		Not used
4183	Special condition code	C	an..3	N		Not used

Remark:

Example:

```
ALI+DE+N'
```

No = Consecutive segment number
MaxOcc = Maximum occurrence of the segment/group
St = Status, EDIFACT: M=Mandatory, C=Conditional
User specific: R=Required, O=Optional, D=Dependent, A=Advised, N=Not used

Segments

No	Tag	St	MaxOcc	Level	Name
	SG11	R	9999	1	**Despatch control line / group of inner packaging items article identification and delivery quantity**
	SG19	R	9999	2	**Article identification and despatch quantity**
	SG20	R	1	3	**Shipment / Delivery note reference**
50	**RFF**	M	1	3	**Shipment / Delivery note reference**

		Standard		Implementation		
Tag	Name	St	Format	St	Format	Usage / Remark
RFF						
C506	Reference	M		M		
1153	Reference code qualifier	M	an..3	M	an..3	**AAU Despatch note document identifier** AAU = delivery note of the supplier or 3PL (3rd party logistics) to the customer
1154	Reference identifier	C	an..70	R	an..35	Delivery note number
1156	Document line identifier	C	an..6	R	an..6	Line number in the delivery note
1056	Version identifier	C	an..9	N		Not used
1060	Revision identifier	C	an..6	N		Not used

Remark:
RFF+AAU is mandatory for all processes

Example:
```
RFF+AAU:74555431:000010'
```

No = Consecutive segment number
MaxOcc = Maximum occurrence of the segment/group
St = Status, EDIFACT: M=Mandatory, C=Conditional
User specific: R=Required, O=Optional, D=Dependent, A=Advised, N=Not used

Segments

No	Tag	St	MaxOcc	Level	Name
	SG11	R	9999	1	**Despatch control line / group of inner packaging items article identification and delivery quantity**
	SG19	R	9999	2	**Article identification and despatch quantity**
	SG20	R	1	3	**Shipment / Delivery note reference**
51	**DTM**	O	1	4	**Delivery note date**

		Standard		Implementation		
Tag	Name	St	Format	St	Format	Usage / Remark
DTM						
C507	Date/time/period	M		M		
2005	Date or time or period function code qualifier	M	an..3	M	an..3	**171 Reference date/time**
2380	Date or time or period text	C	an..35	R	n..12	Delivery note date
2379	Date or time or period format code	C	an..3	O	an..3	**102 CCYYMMDD** **203 CCYYMMDDHHMM**

Remark:

Example:

```
DTM+171:20230404:102'
```

No = Consecutive segment number
MaxOcc = Maximum occurrence of the segment/group
St = Status, EDIFACT: M=Mandatory, C=Conditional
User specific: R=Required, O=Optional, D=Dependent, A=Advised, N=Not used

Segments

No	Tag	St	MaxOcc	Level	Name
	SG11	R	9999	1	**Despatch control line / group of inner packaging items article identification and delivery quantity**
	SG19	R	9999	2	**Article identification and despatch quantity**
	SG20	R	1	3	**Order reference**
	Reference to a related Order message / line				
52	**RFF**	M	1	3	**Order reference**

		Standard		Implementation		
Tag	Name	St	Format	St	Format	Usage / Remark
RFF						
C506	Reference	M		M		
1153	Reference code qualifier	M	an..3	M	an..3	**ON Order document identifier, buyer assigned**
1154	Reference identifier	C	an..70	R	an..35	Unique identifier of an order document.
1156	Document line identifier	C	an..6	N		Not used
1056	Version identifier	C	an..9	N		Not used
1060	Revision identifier	C	an..6	N		Not used

Remark:

Example:

```
RFF+ON:5508856298'
```

No = Consecutive segment number
MaxOcc = Maximum occurrence of the segment/group
St = Status, EDIFACT: M=Mandatory, C=Conditional
User specific: R=Required, O=Optional, D=Dependent, A=Advised, N=Not used

Segments

No	Tag	St	MaxOcc	Level	Name
	SG11	R	9999	1	**Despatch control line / group of inner packaging items article identification and delivery quantity**
	SG19	R	9999	2	**Article identification and despatch quantity**
	SG22	O	1	3	**Internal place of destination**

An internal location within the ship-to's premises, where goods are moved to after they have been unloaded, e.g. an assembly line, an internal warehouse, etc.

53	**LOC**	M	1	3	**Point of use**

		Standard		Implementation		
Tag	Name	St	Format	St	Format	Usage / Remark
LOC						
3227	Location function code qualifier	M	an..3	M	an..3	**159 Additional internal destination**
C517	Location identification	C		R		
3225	Location identifier	C	an..35	O	an..35	Identifier of location, site, etc.
1131	Code list identification code	C	an..17	N		Not used
3055	Code list responsible agency code	C	an..3	O	an..3	Code specifying the agency responsible for a code list. **92 Assigned by buyer or buyer's agent**
3224	Location name	C	an..256	N		Not used
C519	Related location one identification	C		N		
3223	First related location identifier	C	an..35	N		Not used
1131	Code list identification code	C	an..17	N		Not used
3055	Code list responsible agency code	C	an..3	N		Not used
3222	First related location name	C	an..70	N		Not used
C553	Related location two identification	C		N		
3233	Second related location identifier	C	an..35	N		Not used
1131	Code list identification code	C	an..17	N		Not used
3055	Code list responsible agency code	C	an..3	N		Not used
3232	Second related location name	C	an..70	N		Not used
5479	Relation code	C	an..3	N		Not used

Remark:

Example:

```
LOC+159+5620::92'
```

No = Consecutive segment number
MaxOcc = Maximum occurrence of the segment/group
St = Status, EDIFACT: M=Mandatory, C=Conditional
User specific: R=Required, O=Optional, D=Dependent, A=Advised, N=Not used

Segments

No	Tag	St	MaxOcc	Level	Name
54	**UNT**	M	1	0	**Message trailer**

		Standard		Implementation		
Tag	Name	St	Format	St	Format	Usage / Remark
UNT						
0074	Number of segments in the message	M	n..6	M	n..6	Number of segments in the message
0062	Message reference number	M	an..14	M	an..14	Message reference number

Remark:

Example:

```
UNT+50+1'
```

No = Consecutive segment number
MaxOcc = Maximum occurrence of the segment/group
St = Status, EDIFACT: M=Mandatory, C=Conditional
User specific: R=Required, O=Optional, D=Dependent, A=Advised, N=Not used

Segments

No	Tag	St	MaxOcc	Level	Name
55	**UNZ**	M	1	0	**Interchange trailer**

		Standard		Implementation		
Tag	Name	St	Format	St	Format	Usage / Remark
UNZ						
0036	Interchange control count	M	n..6	M	n..6	Number of messages in the interchange
0020	Interchange control reference	M	an..14	M	an..14	Unique ID of the interchange.

Remark:

Example:

```
UNZ+1+2022000025'
```

No = Consecutive segment number
MaxOcc = Maximum occurrence of the segment/group
St = Status, EDIFACT: M=Mandatory, C=Conditional
User specific: R=Required, O=Optional, D=Dependent, A=Advised, N=Not used

```
UNA:+.? '
UNB+UNOC:X+012345678:01+O0013000428BROSE+20230306:0719+2022000025'
UNH+1+DESADV:D:20B:UN:GAVF30'
BGM+351+0003379779+9'
DTM+137:202304040636:203'
DTM+11:2023004040636:203'
DTM+132:202318041000:203'
MEA+AAX+AAD+KGM:447'
MEA+AAX+AAL+KGM:437'
MEA+AAX+ABJ+LTR:980'
MEA+AAE++C62:1'
RFF+CRN:3379666'
RFF+AAO:110324030'
NAD+BY+04547::91++Brose México, S.A. de C.V.+Calle 2 No. 7, Fracc. Ind. Benito
J+Querétaro, México++76120+MX'
NAD+SE+0000001234::92++Lieferant Muster+CO.KG+Musterstr. 20-
30+Musterstadt++51399+DE'
RFF+ANK:315735852'
NAD+ST+1025::92++Rauh Spedition & Logistik GmbH+Hans Rauh Straße
1+Großheirath++96269+DE'
LOC+11+RAUKC::92'
TOD+6++FCA'
LOC+1+Musterstadt'
FTX+CUS+++Text:Text:Text:Text:Text+DE'
TDT+12++30+++++N-AB 443'
CPS+1++3'
PAC+1+:35:AAC+304413-000::92+X:DB0028:SA'
QTY+189:24:PCE'
PCI+17+++6J::5'
GIN+ML+631178407:6JUN315735852631178407'
GIN+AW+631178383+631178384+631178385+631178386+631178387'
GIN+AW+631178388+631178389+631178390+631178391+631178392'
GIN+AW+631178393+631178394+631178395+631178396+631178397'
GIN+AW+631178398+631178399+631178400+631178401+631178402'
GIN+AW+631178403+631178404+631178405+631178406'
COD+NO'
MEA+AAZ+AAB+KGM:447'
MEA+AAZ+AAA+KGM:437'
QTY+52:360:PCE
PAC+1+:37:AAC+3044H0-000::92+X:001208:SA'
CPS+2++1'
PAC+24+:35:AAC+3044EC-000::92+X:006147:SA'
MEA+AAY+G+KGM:15'
```

```
MEA+AAY+AAL+KGM:14'
MEA+AAY+ABJ+DMQ:13'
QTY+52:15:PCE'
PCI+17+++1J::5'
GIR+1+Charge123:BX'
DTM+94:20230131:102'
GIN+ML+631178383:1JUN315735852631178383+631178384:1JUN315735852631178384+631178385:1JUN315735852631178385+631178386:1JUN315735852631178386+631178387:1JUN315735852631178387'
GIN+ML+631178388:1JUN315735852631178388+631178389:1JUN315735852631178389+631178390:1JUN315735852631178390+631178391:1JUN315735852631178391+631178392:1JUN315735852631178392'
GIN+ML+631178393:1JUN315735852631178393+631178394:1JUN315735852631178394+631178395:1JUN315735852631178395+631178396:1JUN315735852631178396+631178397:1JUN315735852631178397'
GIN+ML+631178398:1JUN315735852631178398+631178399:1JUN315735852631178399+631178400:1JUN315735852631178400+631178401:1JUN315735852631178401+631178402:1JUN315735852631178402'
GIN+ML+631178403:1JUN315735852631178403+631178404:1JUN315735852631178404+631178405:1JUN315735852631178405+631178406:1JUN315735852631178406'
PAC+24+:37:DECKEL KLT::92'
LIN+++A62404-110:IN'
PIA+1+123456:SA'
QTY+12:360:PCE'
ALI+DE+N'
RFF+AAU:74555431:1'
DTM+171:20230404:102'
RFF+ON:5508856298'
LOC+159+5620::92'
UNT+59+1'
UNZ+1+2022000025'
```

No = Consecutive segment number
MaxOcc = Maximum occurrence of the segment/group
St = Status, EDIFACT: M=Mandatory, C=Conditional
User specific: R=Required, O=Optional, D=Dependent, A=Advised, N=Not used