Door system made of glass fabric reinforced polypropylene

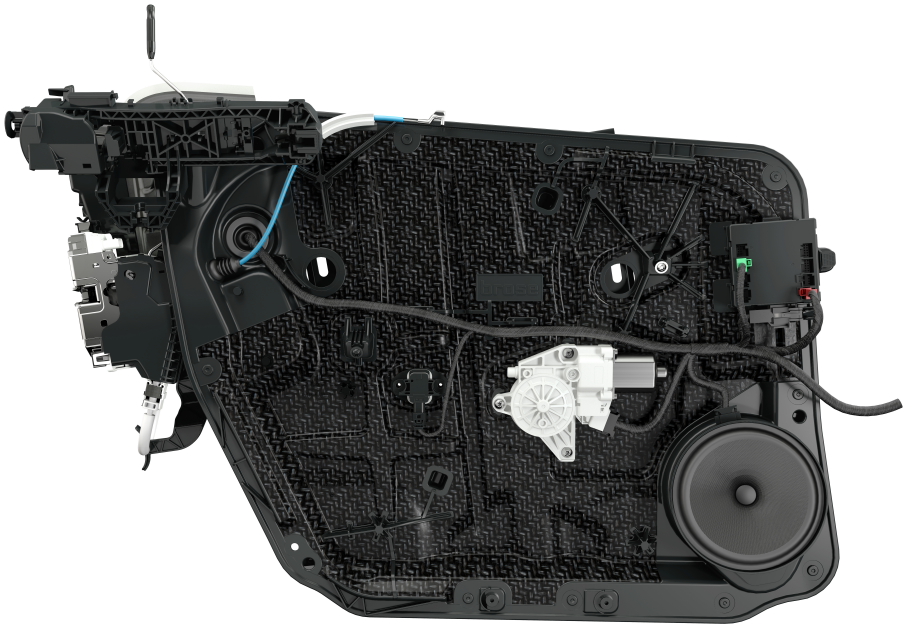

Gegenüber klassischen Kunststofftürsystemen spart die Trägerplatte mit glasgewebeverstärktem Polypropylen rund 350 Gramm Gewicht ein, im Vergleich zu konventionellen Stahltüren sogar knapp 1,2 Kilogramm - bei gleicher Crashsicherheit und hoher Funktionsintegration.

Frankfurt/Main (11. September 2013)

Automotive supplier Brose is setting another benchmark for high-volume lightweight solutions with its new door system generation made of composites. The carrier plate features an intelligent material mix, saving 350 grams of weight compared to conventional plastic door systems and as much as 1.2 kilograms compared to standard steel doors – while maintaining crash safety and high functional integration. Fitted with a lightweight window regulator drive and closure system, this design saves OEMs another 460 grams of weight per door.

Brose already delivers significant weight savings today by using plastic for its door systems: in addition to the lighter base material, functional elements are integrated into the plastic carrier. Consequently, the number of components can be reduced, thus cutting weight and costs. Bearing this in mind, Brose invested in a fully automated injection molding system with an in-line compounding process as well as in relevant material research. The result is a highly economical injection molding process with in-house material formulations for large-volume production.

At the IAA 2013, the company is taking it one step further and presenting the next generation of highly-integrated door systems featuring an intelligent material mix: the functional carrier consists of glass fabric reinforced polypropylene (thermoplastic composite) combined with functional elements made of long glass fiber reinforced plastic such as speaker holders, cable fasteners or holders. However, the material process comprises only a single step: the heated mat of glass fabric reinforced polypropylene is press molded into shape while the functional elements of glass fiber reinforced polypropylene are injection molded. Weighing only 580 grams and featuring a carrier wall thickness of just 0.5 millimeters, this solution is as safe as standard door systems in crash tests.

Holistic lightweight approach: every gram counts

For Brose as a system supplier, the weight of the complete solution counts. This is why all main door components are continuously being refined in line with the carrier plate development to make them lighter and more efficient. Two examples: a new high-end lock variant combines almost all drive performance tasks for a door lock in a multifunctional flex-pole actuator. This new,
electromechanical principle dispenses with up to three standard motors and consequently saves almost 350 grams of weight.

An additional 100 grams of weight are saved with the smallest and most lightweight window regulator drive of the supplier's product range. The highlight: the electronics are directly integrated into the gear housing.

Brose: world market leader for door systems thanks to mechatronics expertise

Brose is regarded as the inventor of the modular door. The door system with wet/dry side separation has become established as a technical standard: all main door functions are brought together on a module carrier and form a pre-tested, ready-to-fit unit. These include window regulator, lock, wiring harness, door trim, loudspeaker, seals and sunblind, as well as control electronics and crash sensors. As a system supplier, Brose develops and produces all essential
components in-house.

The supplier has already received several awards for its lightweight design solution as well as for the comfort and safety features for doors and liftgates. One of the most recent prizes includes the "Automotive Innovations Award 2013" in the car body and exterior category. The award is presented each year by the Center of Automotive Management (CAM) in conjunction with auditing firm Pricewaterhouse Coopers AG (PwC).